Roland

VersaCAMM

VS-640i
VS-540i
VS-300i
USER'S MANUAL

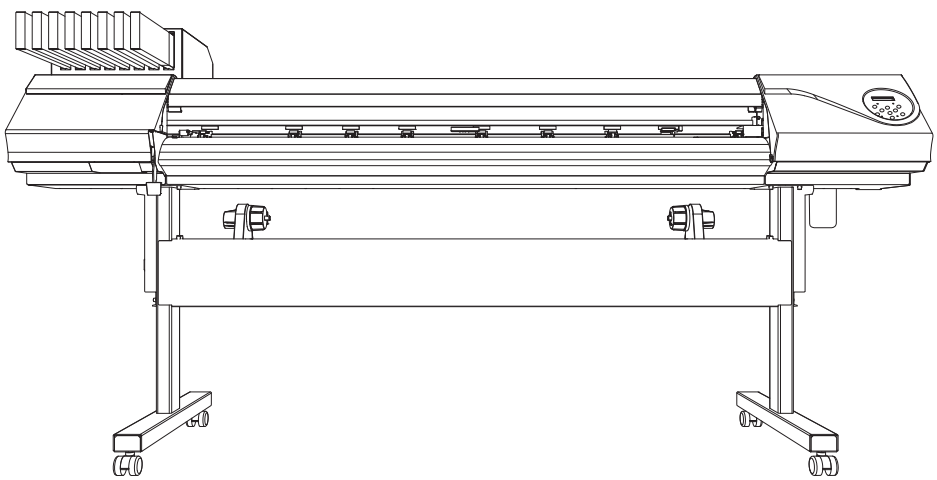

Thank you very much for purchasing this product.

- To ensure correct and safe usage with a full understanding of this product's performance, please be sure to read through this manual completely and store it in a safe location.
- Unauthorized copying or transferral, in whole or in part, of this manual is prohibited.
- The contents of this document and the specifications of this product are subject to change without notice.
- The documentation and the product have been prepared and tested as much as possible. If you find any misprint or error, please inform us.
- Roland DG Corp. assumes no responsibility for any direct or indirect loss or damage which may occur through use of this product, regardless of any failure to perform on the part of this product.
- Roland DG Corp. assumes no responsibility for any direct or indirect loss or damage which may occur with respect to any article made using this product.

Roland DG Corporation

For the USA

FEDERAL COMMUNICATIONS COMMISSION RADIO FREQUENCY INTERFERENCE STATEMENT

This equipment has been tested and found to comply with the limits for a Class A digital device, pursuant to Part 15 of the FCC Rules.
These limits are designed to provide reasonable protection against harmful interference when the equipment is operated in a commercial environment.
This equipment generates, uses, and can radiate radio frequency energy and, if not installed and used in accordance with the instruction manual, may cause harmful interference to radio communications.
Operation of this equipment in a residential area is likely to cause harmful interference in which case the user will be required to correct the interference at his own expense.

Unauthorized changes or modification to this system can void the users authority to operate this equipment.

Use only I/O cables that have been designed and manufactured specifically for this device.

For Canada

CAN ICES-3 (A)/NMB-3(A)

For California

WARNING
This product contains chemicals known to cause cancer, birth defects and other reproductive harm.

For EU Countries

WARNING
This is a Class A product. In a domestic environment this product may cause radio interference in which case the user may be required to take adequate measures.

NOTICE

Grounding Instructions

In the event of a malfunction or breakdown, grounding provides a path of least resistance for electric current to reduce the risk of electric shock. This tool is equipped with an electric cord having an equipment-grounding conductor and a grounding plug. The plug must be plugged into a matching outlet that is properly installed and grounded in accordance with all local codes and ordinances.

Do not modify the plug provided - if it will not fit the outlet, have the proper outlet installed by a qualified electrician.

Improper connection of the equipment-grounding conductor can result in a risk of electric shock. The conductor with insulation having an outer surface that is green with or without yellow stripes is the equipment-grounding conductor. If repair or replacement of the electric cord or plug is necessary, do not connect the equipment-grounding conductor to a live terminal.

Check with a qualified electrician or service personnel if the grounding instructions are not completely understood, or if in doubt as to whether the tool is properly grounded.

Use only 3-wire extension cords that have 3-prong grounding plugs and 3-pole receptacles that accept the tool's plug.

Repair or replace damaged or worn out cord immediately.

Operating Instructions

KEEP WORK AREA CLEAN. Cluttered areas and benches invites accidents.

DON'T USE IN DANGEROUS ENVIRONMENT. Don't use power tools in damp or wet locations, or expose them to rain. Keep work area well lighted.

DISCONNECT TOOLS before servicing; when changing accessories, such as blades, bits, cutters, and like.

REDUCE THE RISK OF UNINTENTIONAL STARTING. Make sure the switch is in off position before plugging in.

USE RECOMMENDED ACCESSORIES. Consult the owner's manual for recommended accessories. The use of improper accessories may cause risk of injury to persons.

NEVER LEAVE TOOL RUNNING UNATTENDED. TURN POWER OFF. Don't leave tool until it comes to a complete stop.

For EU Countries

CE

Manufacturer:
ROLAND DG CORPORATION
1-6-4 Shinmiyakoda, Kita-ku, Hamamatsu-shi, Shizuoka-ken, 431-2103 JAPAN

The authorized representative in the EU:
Roland DG EMEA, S.L.
Parc Tecnologic del Valles C/ Ceramistes, 6 08290 Cerdanyola del Valles / Barcelona Spain

Contents

Contents 1

Chapter 1 Machine Highlights 5

Part Names and Functions 6
- Printer Unit 6
- Operation Panel 8

Menu List 9
- Main Menu 9
- Language and Unit Menu 12
- Function Menu 13

⚠ To Ensure Safe Use 14
⚠ Pour utiliser en toute sécurité 21
Important Notes on Handling and Use 29

Chapter 2 Basic Operation 31

Prepare the Media 32
- Type of Media 32
- Usable Media 33

Switch On! 34
- Switch On! 34
- The Power-Saving Feature (Sleep Mode) 34

Loading Media 35
- Loading Roll Media 35
- Loading the Sheet Media 42
- Performing the Initial Adjustment (Correcting for Misalignment in Bidirectional Printing More Precisely) 44

Setup of Media 46
- About [Media Setting] Menu 46
- Setup of Media ([Media Setting] Menu) 46

Outputting 57
- Setting the Output-Start Location 57
- Printing Tests and Cleaning 58
- Important Note on Cutting 60
- Setting the Cutting Test and the Blade Force 61
- Getting Ready to Receive Data from a Computer 62
- Starting Output 63
- Pausing and Canceling Output 64
- Cutting Off the Media 64

Switch Off 66
- Switch Off 66

Chapter 3 Maintenance: For always in the best condition.....67

Checking for Remaining Ink and Replacing Cartridges 68
Checking for Remaining Ink 68
How to Replace Ink Cartridges 69
Maintenance that Should Be Performed Daily 70
Disposing of Discharged Ink 70
Cleaning 72
About Care and Maintenance of Print Heads 73
When Normal Cleaning Is Not Effective 74
Medium / Powerful Cleaning 74
When Uneven Color Issue Occurs 75
Light Choke Cleaning 75
Maintenance that Should Be Performed More Than Once a Month 77
When Manual-Cleaning Becomes Necessary 77
Manual Cleaning 78
When Problems Such As Dot Drop-Out Are Not Cleared Up 83
When Problems Such As Dot Drop-Out Are Not Cleared Up 83
Replacing Consumable Parts 86
Replacing the Wiper 86
Replacing the Felt Wiper 89
Replacing the Blade 92
Replacing the Separating Knife 94
When Not in Use for a Prolonged Period 96
Keep Performing Maintenance 96
Alarm Feature 96

Chapter 4 Part of Practice 97

Fully Utilizing Preset Function 98
Saving Various Settings as a Name Assigned Preset 98
Loading a Saved Preset 100
Fully Utilize the Media Heating System 101
What Is the Media Heating System? 101
Making the Temperature Setting for the Media Heating System 101
Control of Media Heating System During Preheating 103
Drying the Trailing Edge of the Printing Area on the Dryer 104
Setting the Drying Time After Printing 104
Using an Optional Dryer 105
Fully Utilizing the Correction Function 106
Correcting for Misalignment in Bidirectional Printing 106
Correcting for Misalignment in Bidirectional Printing More Precisely 107
Alleviating Horizontal Bands and the Like (Feed Correction Function) 107
Accommodating to the Types and Condition of Media 109
Adjusting Head Height to Match Media Thickness 109
Using Transparent Media 110
Printing Hard-to-Dry Media 110
Using the Media Easy to Be Winkled/Hard to Be Fed 111
Speeding Up Output for Narrow Media 112
Preventing Soiling of the Media and Dot Drop-Out 113
Using Sticky Media 114

Fully Utilizing Cutting Function 115
Hints and Tips for Cutting Setting 115
Preventing Pulling of the Media with Undue Force When Performing Cutting Only 115
Fine-Tuning the Cutting Conditions 116
Accurately Adjusting the Cutting-in Amount 118
Performing Distance Correction During Cutting 119
Correcting Misalignment of the Printing and Cutting Positions 120
Prioritize the Cuttings Setting of This Machine to the Settings of a Computer Side in RIP Software 122
Viewing the Automatic Environment Correction Function Settings 123
Correcting Misalignment of the Printing and Cutting Positions During Cutting 123
Performing Printing and Cutting Separately 126
To Perform Printing and Cutting Separately 126
Printing with Crop Marks 126
Aligning Automatically and Cutting 128
Aligning Manually and Cutting 130
Correcting Misalignment for Printing and Cutting When Using Crop Marks 131
Using Media Take-Up System 134
Use the Media Take-Up System When the Output Accompanied with the Pull-Back Operation Is Performed 134
Use Conditions of Take-Up System When "TU2" Is Selected 134

Chapter 5 To Administrators 137

Output Operation Management 138
Printing a System Report 138
Determining What Happens When Ink Runs Out 138
Displaying the Amount of Media Remaining 139
Making Sure to Verify the Setting for the Amount Remaining Every Time the Media Is Changed 140
Printing the Amount of Remaining Media 141
System Management of Printer 142
Setting for the Menu Language and the Units of Measurement 142
Setting the Interval Until Activation of the Sleep Mode (Power Saving Function) 142
Viewing Information About the System of This Machine 143
Returning All Settings to Their Initial Values 144

Chapter 6 Read This Chapter Whenever You Face a Problem. (FAQ) 145

Attractive Printing or Cutting Is Impossible 146
Printed Results Are Coarse or Contain Horizontal Stripes 146
Colors Are Unstable or Uneven 147
The Media Becomes Soiled When Printed.....148
Cutting Is Misaligned or Skewed 148
Media Jam Occurs! 150
The Media Jams.....150
Media Feed Is Not Smooth 151
Media Wrinkles or Shrinks 151
Media Feed Is Not Straight.....152
Media Feed Is Not Smooth.....152
Print Head Stops Moving. Why? 153
What to Do First 153
If the Heads Still Do Not Move.....153
Other Problems 155
The Printer Unit Doesn't Run.....155
The Media Heating System Doesn't Warm Up.....156
Cannot Cut Off the Media 156
Discharged Fluid Level Cannot Be Checked. 157
A Message Appears 158
An Error Message Appears 159

Chapter 7 Main Specifications.....163

Printing/Cutting Area 164
Maximum Area 164
Maximum Area When Using Crop Marks 164
The Media-Cutoff Location During Continuous Printing.....165
About the Blade.....166
Locations of the Power Rating and Serial Number Labels.....167
Specifications 168

This document is the Use's Manual for four models: VS-640i/540i/300i. This document uses the following notation to distinguish between the four models where necessary.
VS-640i — 64-inch model
VS-540i — 54-inch model
VS-300i — 30-inch model

Also, most of the figures in this document depict the VS-640i.

Company names and product names are trademarks or registered trademarks of their respective holders.

Copyright © 2013 Roland DG Corporation

http://www.rolanddg.com/

Chapter 1
Machine Highlights

Part Names and Functions 6
Printer Unit 6
Operation Panel 8
Menu List 9
Main Menu 9
Language and Unit Menu 12
Function Menu 13
⚠ To Ensure Safe Use 14
⚠ Pour utiliser en toute sécurité 21
Important Notes on Handling and Use 29

Part Names and Functions

Printer Unit

Front

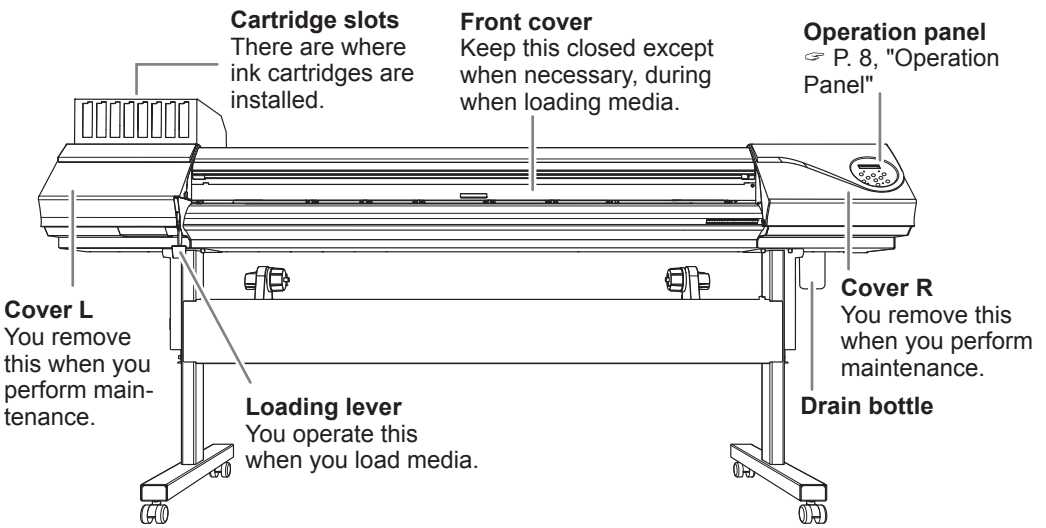

Rear

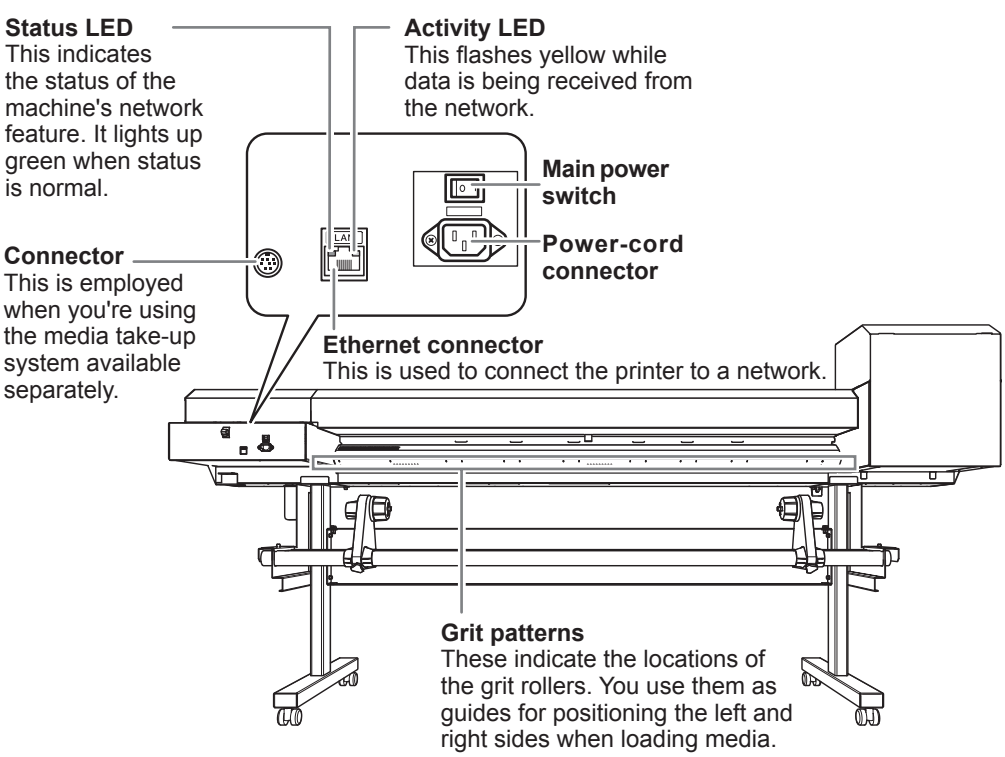

Front Cover Inside/Print Heads Periphery

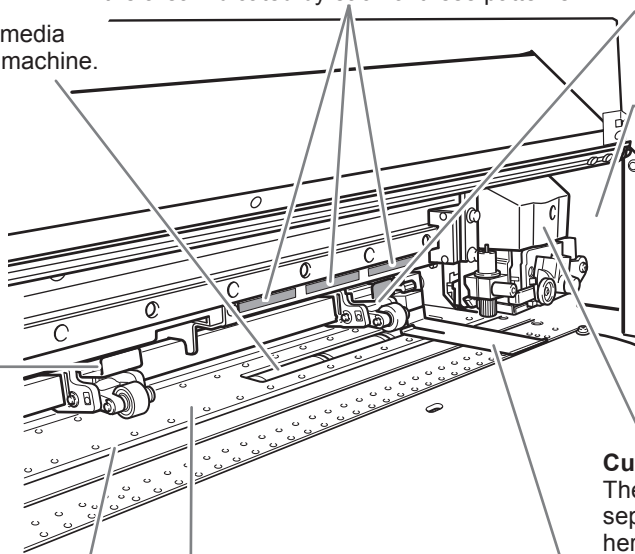

Grit patterns
These indicate the locations of the grit rollers. The pinch rollers must always be placed within the area indicated by each of these patterns.

Grit rollers
These rollers feed out media toward the front of the machine.

Middle pinch rollers
These are detachable and remountable pinch rollers. The number that can be used varies according to the width of the media.

Left and right pinch rollers
These clamp the media when the loading lever is lowered.

Print-head carriage
The print heads are inside this.

Cutting carriage
The blade and the separating knife are inside here.

Blade protector
This protects the tip of the blade during cutting.

Platen
This is the path over which the media passes. A suction fan that keeps the media from coming loose and print heater that helps fix the ink are built in.

Media clamps
These keep the media from coming loose and prevent fuzz on the cut.

Apron
This has a built-in dryer to speed up drying of the ink.

Operation Panel

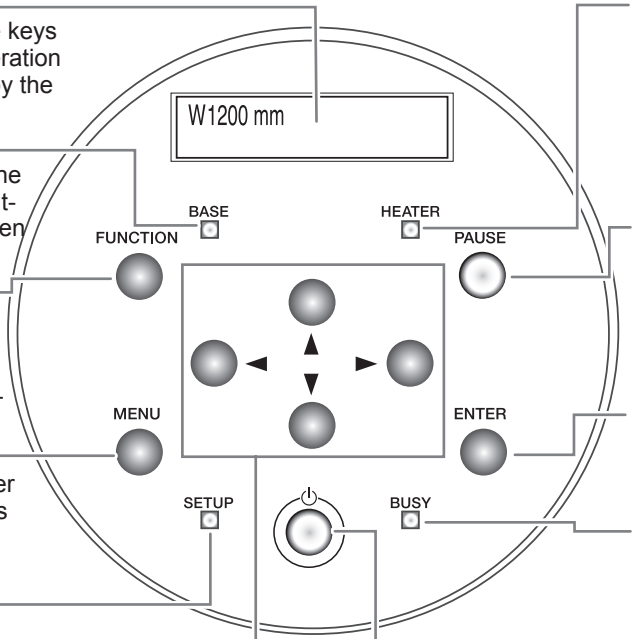

Display screen
In this document, the keys and lights on the operation panel are indicated by the following images.

BASE POINT light
This lights up when the base point (the output-start location) has been set.

FUNCTION key
You press this when entering the setting menu for cleaning of the print heads, printing tests.

MENU key
You press this to enter the menus for various settings.

SETUP light
This lights up when media has been loaded correctly.

HEATER light
This flashes while the media heating system is warming up, changing to a steadily lighted state when the preset temperature is reached.

PAUSE key
This pauses printing operation. This lights up when operation is paused.

ENTER key
You use this for such tasks as enabling setting values.

BUSY light
This lights up during printing, cutting and other such operations.

Cursor keys
You use these to select settings for menu items, to move the media, and for other such operations.

Sub power switch
This switches the printer on and off. (To switch the printer off, you hold down the switch for one second or longer). The light flashes slowly when the machine is in the sleep mode.

Panel Notation

In this document, the keys and lights on the operation panel are indicated by the following illustration.

(MENU) **MENU key**
(FUNCTION) **FUNCTION key**
(ENTER) **ENTER key**
(PAUSE) **PAUSE key**
(▲) (▼) (◄) (►) **Cursor keys**
[SETUP] **SETUP light**
[BUSY] **BUSY light**
[BASE] **BASE POINT light**
[HEATER] **HEATER light**

Menu List

Main Menu

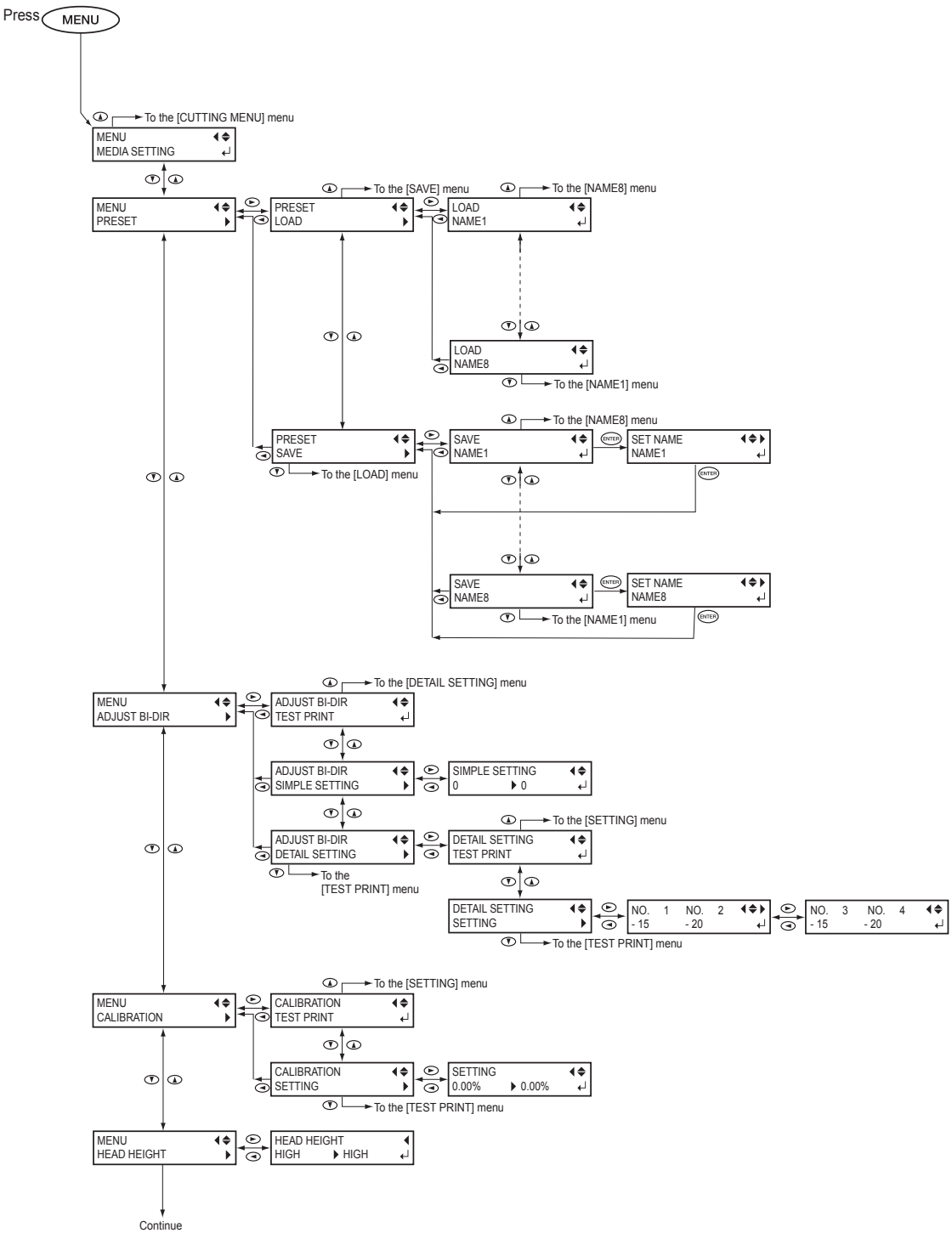

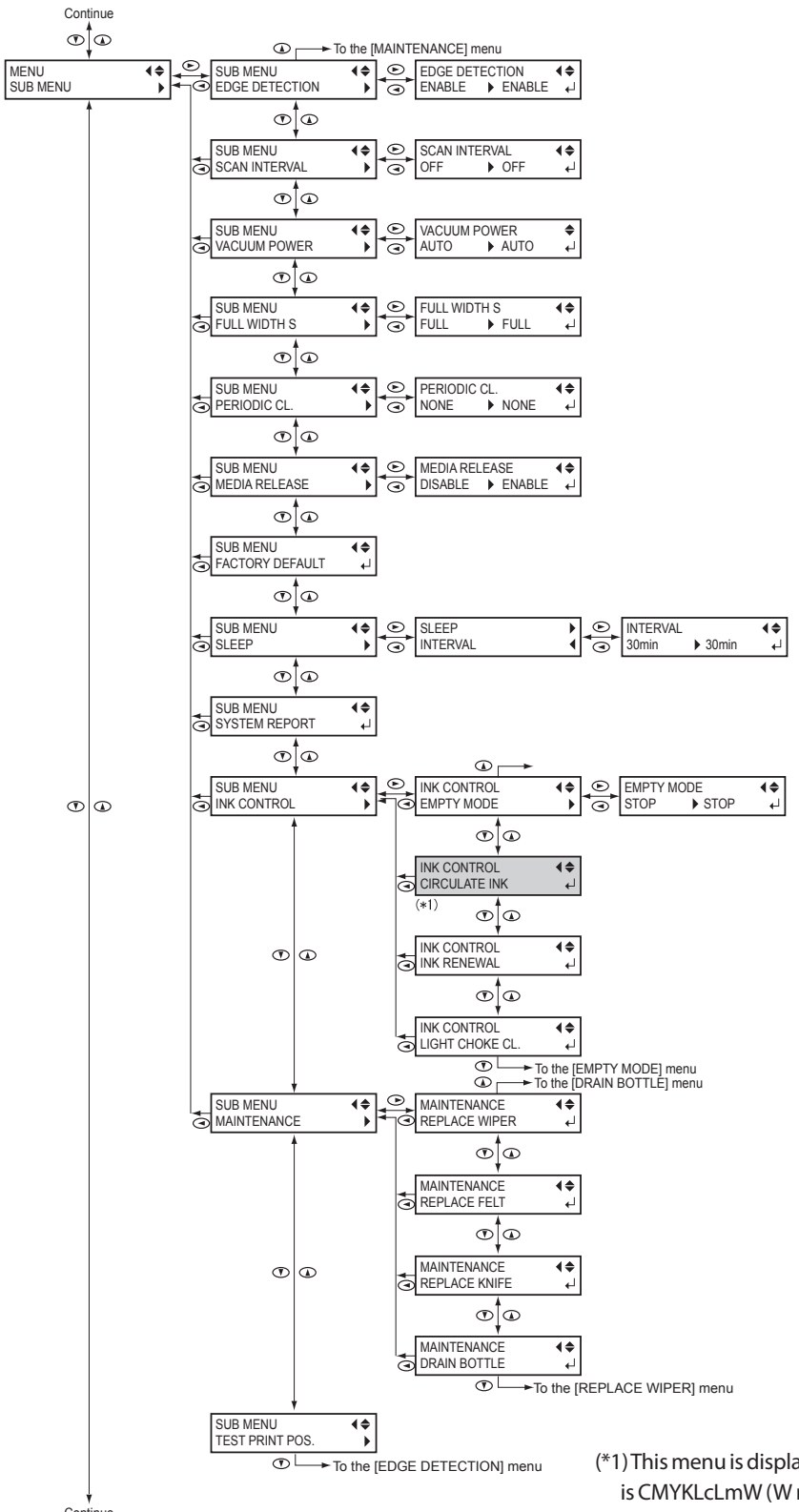

(*1) This menu is displayed only when the ink mode is CMYKLcLmW (W mode), CMYKLcLmLkMT (MT mode), or CMYKLcLmWMT (WMT mode).

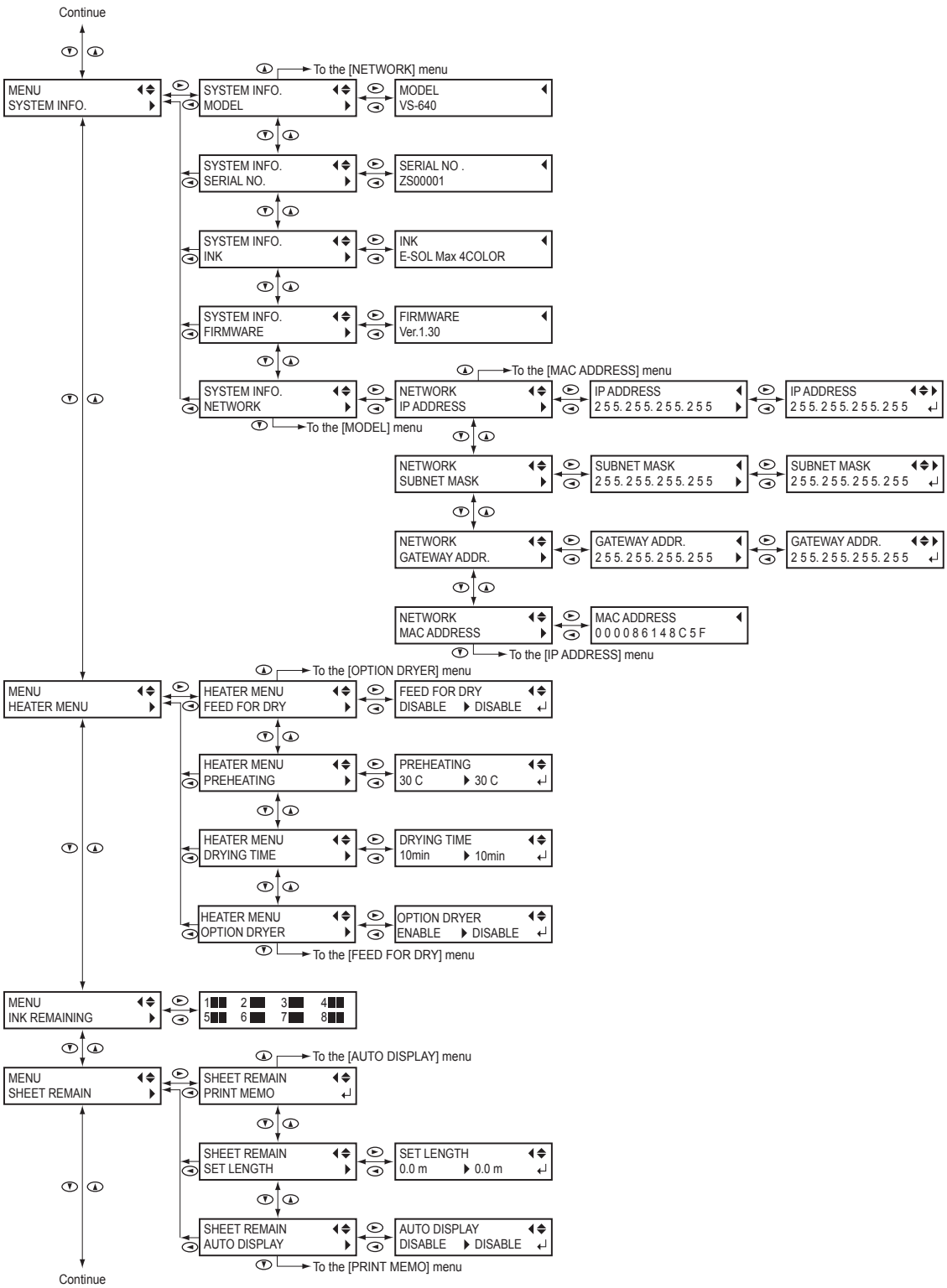
Continue
MENU
SYSTEM INFO.
To the [NETWORK] menu
SYSTEM INFO.
MODEL
MODEL
VS-640
SYSTEM INFO.
SERIAL NO.
SERIAL NO .
ZS00001
SYSTEM INFO.
INK
INK
E-SOL Max 4COLOR
SYSTEM INFO.
FIRMWARE
FIRMWARE
Ver.1.30
To the [MAC ADDRESS] menu
SYSTEM INFO.
NETWORK
NETWORK
IP ADDRESS
IP ADDRESS
255.255.255.255
IP ADDRESS
255.255.255.255
To the [MODEL] menu
NETWORK
SUBNET MASK
SUBNET MASK
255.255.255.255
SUBNET MASK
255.255.255.255
NETWORK
GATEWAY ADDR.
GATEWAY ADDR.
255.255.255.255
GATEWAY ADDR.
255.255.255.255
NETWORK
MAC ADDRESS
MAC ADDRESS
0 0 0 0 8 6 1 4 8 C 5 F
To the [IP ADDRESS] menu
To the [OPTION DRYER] menu
MENU
HEATER MENU
HEATER MENU
FEED FOR DRY
FEED FOR DRY
DISABLE DISABLE
HEATER MENU
PREHEATING
PREHEATING
30 C 30 C
HEATER MENU
DRYING TIME
DRYING TIME
10min 10min
HEATER MENU
OPTION DRYER
OPTION DRYER
ENABLE DISABLE
To the [FEED FOR DRY] menu
MENU
INK REMAINING
1 2 3 4
5 6 7 8
To the [AUTO DISPLAY] menu
MENU
SHEET REMAIN
SHEET REMAIN
PRINT MEMO
SHEET REMAIN
SET LENGTH
SET LENGTH
0.0 m 0.0 m
SHEET REMAIN
AUTO DISPLAY
AUTO DISPLAY
DISABLE DISABLE
To the [PRINT MEMO] menu
Continue

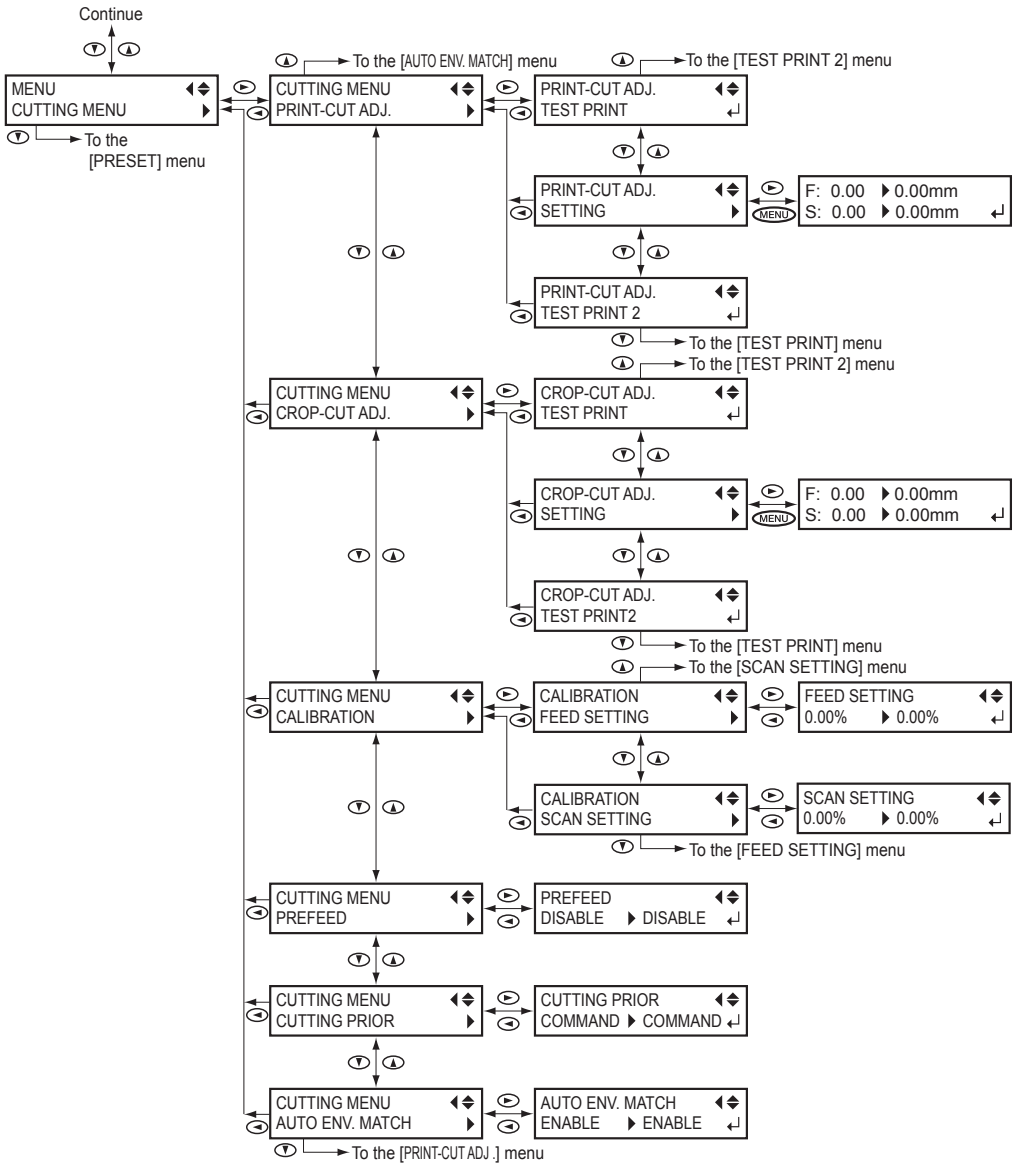

Language and Unit Menu

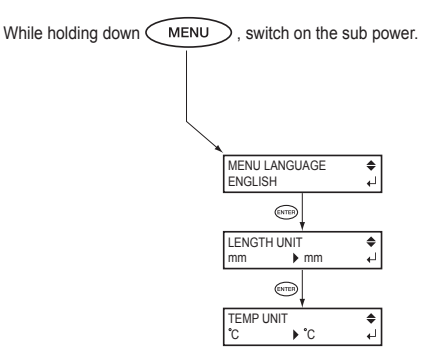

Function Menu

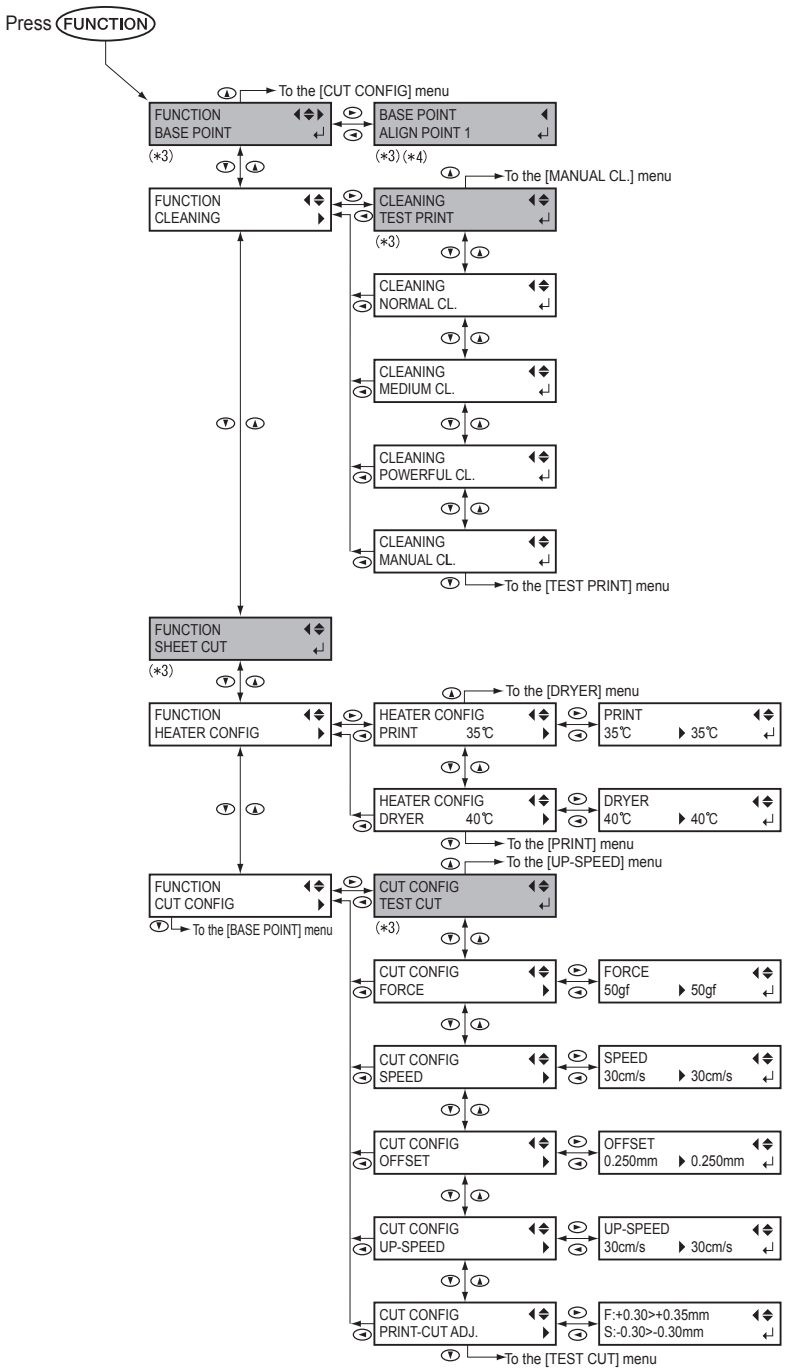

(*2) This is not displayed when no media is loaded (that is, when SETUP is dark).

(*3) This is not displayed when base point is not set.

(*4) This is displayed when no media is loaded (that is, when SETUP is dark) or when the width of the media is displayed after the media has been loaded.

(*5) This is not displayed when PAUSE is not pressed.

⚠ To Ensure Safe Use

Improper handling or operation of this machine may result in injury or damage to property. Points which must be observed to prevent such injury or damage are described as follows.

About ⚠ WARNING and ⚠ CAUTION Notices

⚠ **WARNING**	Used for instructions intended to alert the user to the risk of death or severe injury should the unit be used improperly.
⚠ **CAUTION**	Used for instructions intended to alert the user to the risk of injury or material damage should the unit be used improperly. Note: Material damage refers to damage or other adverse effects caused with respect to the home and all its furnishings, as well to domestic animals or pets.

About the Symbols

	The △ symbol alerts the user to important instructions or warnings. The specific meaning of the symbol is determined by the design contained within the triangle. The symbol at left means "danger of electrocution."
	The ⃠ symbol alerts the user to items that must never be carried out (are forbidden). The specific thing that must not be done is indicated by the design contained within the circle. The symbol at left means the unit must never be disassembled.
	The ● symbol alerts the user to things that must be carried out. The specific thing that must be done is indicated by the design contained within the circle. The symbol at left means the power-cord plug must be unplugged from the outlet.

⚠ Incorrect operation may cause injury.

⚠ WARNING

Be sure to follow the operation procedures described in this documentation. Never allow anyone unfamiliar with the usage or handling of the machine to touch it.
Incorrect usage or handling may lead to an accident.

Keep children away from the machine.
The machine includes areas and components that pose a hazard to children and may result in injury, blindness, choking, or other serious accident.

Never operate the machine while tired or after ingesting alcohol or any medication.
Operation requires unimpaired judgment. Impaired judgment may result in an accident.

Never use the machine for any purpose for which it is not intended, or use the machine in an undue manner that exceeds its capacity.
Doing so may result in injury or fire.

For accessories (optional and consumable items, power cord, and the like), use only genuine articles compatible with this machine.
Incompatible items may lead to an accident.

Before attempting cleaning, maintenance, or attachment or detachment of optional items, disconnect the power cord.
Attempting such operations while the machine is connected to a power source may result in injury or electrical shock.

Never attempt to disassemble, repair, or modify the machine.
Doing so may result in fire, electrical shock, or injury. Entrust repairs to a trained service technician.

⚠ CAUTION

Exercise caution to avoid being pinched or becoming caught.
Inadvertent contact with certain areas may cause the hand or fingers to be pinched or become caught. Use care when performing operations.

Never attempt operation while wearing a necktie, necklace, or loose clothing. Bind long hair securely.
Such items may become caught in the machine, resulting in injury.

Conduct operations in a clean, brightly lit location.
Working in a location that is dark or cluttered may lead to an accident, such as becoming caught in the machine as the result of an inadvertent stumble.

Never climb or lean on the machine.
The machine is not made to support a person. Climbing or leaning on the machine may dislodge components and cause a slip or fall, resulting in injury.

Caution: cutting tool.
This machine has an internal tool. To avoid injury, handle the tool with care.

⚠ Danger of electrical short, shock, electrocution, or fire

⚠ WARNING

Connect to an electrical outlet that complies with this machine's ratings (for voltage, frequency, and current).
Incorrect voltage or insufficient current may cause fire or electrical shock.

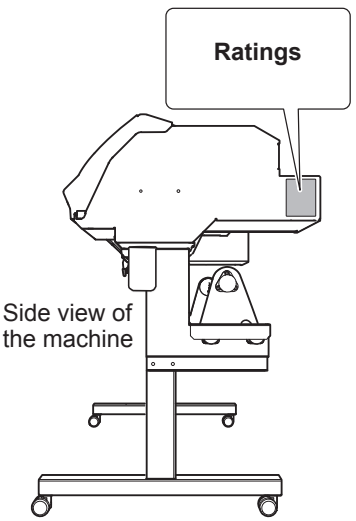

Never use out of doors or in any location where exposure to water or high humidity may occur. Never touch with wet hands.
Doing so may result in fire or electrical shock.

Never allow any foreign object to get inside. Never expose to liquid spills.
Inserting objects such as coins or matches or allowing beverages to be spilled into the ventilation ports may result in fire or electrical shock. If anything gets inside, immediately disconnect the power cord and contact your authorized Roland DG Corp. dealer.

Never place any flammable object nearby. Never use a combustible aerosol spray nearby. Never use in any location where gases can accumulate.
Combustion or explosion may be a danger.

⚠ WARNING

Handle the power cord, plug, and electrical outlet correctly and with care. Never use any article that is damaged.
Using a damaged article may result in fire or electrical shock.

When using an extension cord or power strip, use one that adequately satisfies the machine's ratings (for voltage, frequency, and current).
Use of multiple electrical loads on a single electrical outlet or of a lengthy extension cord may cause fire.

Connect to ground.
This can prevent fire or electrical shock due to current leakage in the event of malfunction.

Position so that the power plug is within immediate reach at all times.
This is to enable quick disconnection of the power plug in the event of an emergency. Install the machine next to an electrical outlet. Also, provide enough empty space to allow immediate access to the electrical outlet.

If sparking, smoke, burning odor, unusual sound, or abnormal operation occurs, immediately unplug the power cord. Never use if any component is damaged.
Continuing to use the machine may result in fire, electrical shock, or injury. Contact your authorized Roland DG Corp. dealer.

Do not use the supplied power supply cord for other products.

⚠ Important notes about the power cord, plug, and electrical outlet

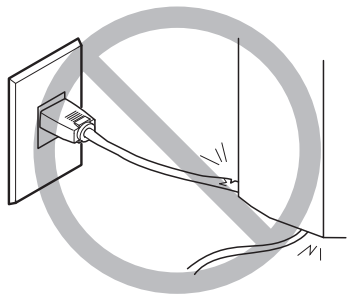

Never place any object on top or subject to damage.

Never allow to get wet.

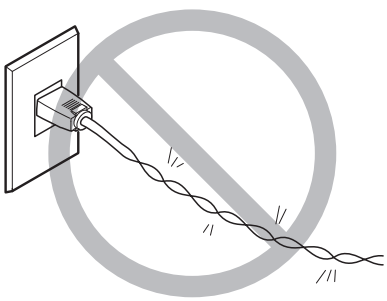

Never bend or twist with undue force.

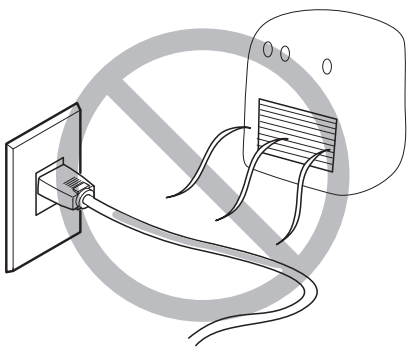

Never make hot.

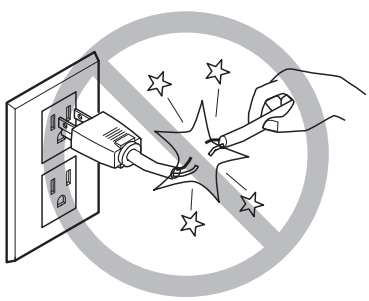

Never pull with undue force.

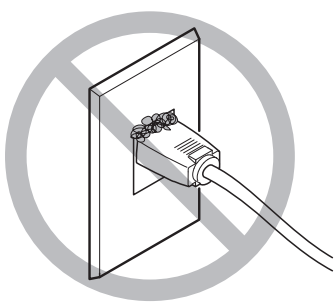

Dust may cause fire.

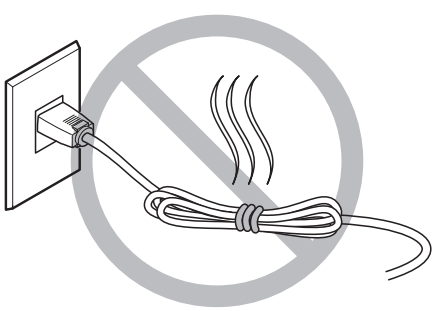

Never bundle, bind, or roll up.

⚠ Ink, cleaning fluid, and discharged fluid are flammable and toxic.

⚠ WARNING

Keep open flame away from the work area.
Ink and discharged fluid are flammable.

Never store ink, cleaning fluid, or discharged fluid in any of the following locations.
- Any location exposed to open flame
- Any location where high temperature may occur
- Near bleach or any other such oxidizing agent or explosive material
- Any location within the reach of children

Fire may be a danger. Accidental ingestion by children may pose a health hazard.

Never place an ink cartridge in fire.
Ink may flow out, catch fire, and spread fire to other nearby objects.

Never drink or sniff ink, cleaning fluid, or discharged fluid, or allow them to come in contact with the eyes or skin.
Doing so may be hazardous to the health.

⚠ CAUTION

Ensure adequate ventilation for the work area.
Failing to perform ventilation may result in a health hazard or danger of combustion due to ink fumes.

Never allow an ink cartridge to be subjected to impact, and never attempt to disassemble.
Ink may leak.

⚠ In the event of ingestion or physical distress

- In the event of contact with the eyes, immediately flush with water for at least 15 minutes. If eye irritation continues, seek treatment by a physician.
- In the event of contact with skin, immediately wash with soap. If irritation or inflammation occurs, seek treatment by a physician.
- In the event of ingestion, do not induce vomiting, and immediately seek treatment by a physician. Forcibly inducing vomiting may lead to danger of choking.
- If odor leads to physical distress, move to a well-ventilated location and rest quietly. If dizziness or nausea persists, seek treatment by a physician.

⚠ This machine weighs 225 kg (497 lbs). Media weighs 40 kg (88 lbs).

⚠ WARNING

Install the machine in a location that is level, stable, and able to bear the weight of the machine.
The total weight may reach over 200 kg (497 lbs) for the 64-inch model, 190 kg (419 lbs) for the 54-inch model, and 155 kg (342 lbs) for the 30-inch model). Installation in an unsuitable location may cause a major accident, including tip over, fall, or collapse.

Unloading and emplacement are operations that must be performed by 6 persons or more (by 4 persons or more for the 30-inch model).
Tasks that require undue effort when performed by a small number of persons may result in physical injury. Also, if dropped, such items may cause injury.

⚠ WARNING

Be sure to lock the stand's casters.
If the machine should begin to topple, a major accident may result, including crushing of the appendages or the body.

When storing roll media, implement adequate safety measures to ensure that the stored media will not roll, fall, or topple over.
Danger exists of becoming pinned under the media and suffering serious injury.

Handling roll media is an operation that must be performed by two persons or more, and care must be taken to prevent falls.
Attempting to lift heavy media in a manner that taxes your strength may cause physical injury.

⚠ Danger of fire, burns, or toxic gas emissions

⚠ WARNING

Caution: high temperatures
Areas such as the dryer become hot. Exercise caution to avoid fire or burns.

When printing is not being performed, remove any loaded media or switch off the power.
The continued application of heat at a single location may cause the release of toxic gases from the media or pose a fire hazard.

⚠ WARNING

Never use media that cannot withstand heat.
Doing so may degrade the media, or may result in fire or the release of toxic gases.

⚠ Warning Labels

Warning labels are affixed to make areas of danger immediately clear. The meanings of these labels are as follows. Be sure to heed their warnings. Also, never remove the labels or allow them to become obscured.

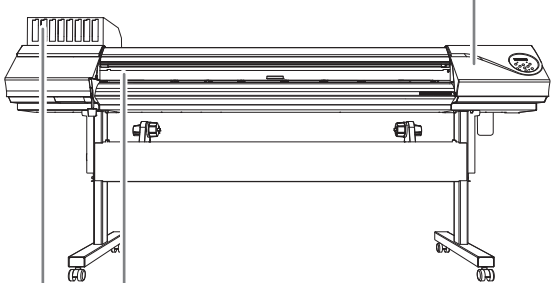

Caution: Pinching Hazard
Be careful not to allow the fingers to become pinched when loading media or closing covers.

Caution: Moving Print Heads
The print heads inside the cover move at high speed and pose a hazard. Never insert the hand or fingers into the gap.

Flammable
Ink and discharged fluid are flammable. Keep away from open flame.

Ink Is Toxic
Ink and discharged fluid are toxic. Avoid contact with the body. Use only in a well ventilated area.

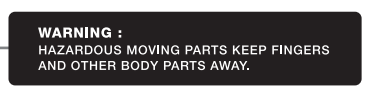

Caution: Moving Print Heads
The print heads inside the front cover move at high speed and pose a hazard. Never insert the hand or fingers into the gap.

Caution: High Temperature
The platen and dryer become hot. Exercise caution to avoid fire or burns.

Flammable
Ink and discharged fluid are flammable. Keep away from open flame.

Ink Is Toxic
Ink and discharged fluid are toxic. Avoid contact with the body. Use only in a well ventilated area.

Caution: High Voltage
Cover removal may pose hazard of shock or electrocution due to high voltage.

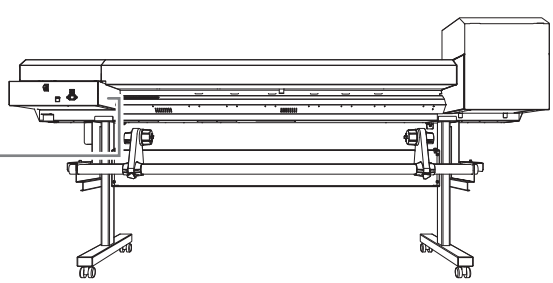

⚠ Pour utiliser en toute sécurité

La manipulation ou l'utilisation inadéquates de cet appareil peuvent causer des blessures ou des dommages matériels. Les précautions à prendre pour prévenir les blessures ou les dommages sont décrites ci-dessous.

Avis sur les avertissements

⚠ **ATTENTION**	Utilisé pour avertir l'utilisateur d'un risque de décès ou de blessure grave en cas de mauvaise utilisation de l'appareil.
⚠ **PRUDENCE**	Utilisé pour avertir l'utilisateur d'un risque de blessure ou de dommage matériel en cas de mauvaise utilisation de l'appareil. * Par dommage matériel, il est entendu dommage ou tout autre effet indésirable sur la maison, tous les meubles et même les animaux domestiques.

À propos des symboles

	Le symbole △ attire l'attention de l'utilisateur sur les instructions importantes ou les avertissements. Le sens précis du symbole est déterminé par le dessin à l'intérieur du triangle. Le symbole à gauche signifie "danger d'électrocution."
	Le symbole ⃠ avertit l'utilisateur de ce qu'il ne doit pas faire, ce qui est interdit. La chose spécifique à ne pas faire est indiquée par le dessin à l'intérieur du cercle. Le symbole à gauche signifie que l'appareil ne doit jamais être démonté.
	Le symbole ● prévient l'utilisateur sur ce qu'il doit faire. La chose spécifique à faire est indiquée par le dessin à l'intérieur du cercle. Le symbole à gauche signifie que le fil électrique doit être débranché de la prise.

⚠ L'utilisation incorrecte peut causer des blessures

⚠ ATTENTION

S'assurer de suivre les procédures d'utilisation décrites dans la documentation. Ne jamais permettre à quiconque ne connaît pas le fonctionnement ou la manutention de l'appareil de le toucher.
L'utilisation ou la manutention incorrectes peuvent causer un accident.

Garder les enfants loin de l'appareil.
L'appareil comporte des zones et des composants qui présentent un danger pour les enfants et qui pourraient causer des blessures, la cécité, la suffocation ou d'autres accidents graves.

Ne jamais faire fonctionner l'appareil après avoir consommé de l'alcool ou des médicaments, ou dans un état de fatigue.
L'utilisation de l'appareil exige un jugement sansfaille. L'utilisation avec les facultés affaiblies pourrait entraîner un accident.

Ne jamais utiliser l'appareil à des fins autres que celles pour lesquelles il est conçu. Ne jamais l'utiliser de manière abusive ou d'une manière qui dépasse sa capacité.
Le non-respect de cette consigne peut causer des blessures ou un incendie.

Utiliser uniquement des accessoires d'origine (accessoires en option, articles consommables, câble d'alimentation et autres articles semblables), compatibles avec l'appareil.
Les articles incompatibles risquent de causer des accidents.

⚠ ATTENTION

Débrancher le câble d'alimentation avant de procéder au nettoyage ou à l'entretien de l'appareil, et avant d'y fixer ou d'en retirer des accessoires en option.
Tenter ces opérations pendant que l'appareil est branché à une source d'alimentation peut causer des blessures ou un choc électrique.

Ne jamais tenter de démonter, de réparer ou de modifier l'appareil.
Le non-respect de cette consigne risque de provoquer un incendie, un choc électrique ou des blessures. Confier les réparations à un technicien ayant la formation requise.

⚠ PRUDENCE

Faire preuve de prudence pour éviter l'écrasement ou le coincement.
La main ou les doigts peuvent être écrasés ou coincés s'ils entrent en contact avec certaines surfaces par inadvertance. Faire preuve de prudence pendant l'utilisation de l'appareil.

Ne jamais faire fonctionner l'appareil si on porte une cravate, un collier ou des vêtements amples. Bien attacher les cheveux longs.
Ces vêtements ou ces objets peuvent être coincés dans l'appareil, ce qui causerait des blessures.

⚠ PRUDENCE

Utiliser l'appareil dans un endroit propre et bien éclairé.
Travailler dans un endroit sombre ou encombré peut causer un accident; l'utilisateur risque, par exemple, de trébucher malencontreusement et d'être coincé par une partie de l'appareil.

⚠ PRUDENCE

Ne jamais grimper ni s'appuyer sur la machine.
La machine n'est pas conçue pour supporter le poids d'une personne. Grimper ou s'appuyer sur la machine peut déplacer des éléments et causer un faux pas ou une chute, ce qui causerait des blessures.

Attention : outil de coupe.
Cet appareil contient un outil interne. Pour éviter les blessures, manipuler l'outil avec soin.

⚠ Risque de décharge ou de choc électrique, d'électrocution ou d'incendie

⚠ ATTENTION

Brancher à une prise électrique conforme aux caractéristiques de cet appareil (tension, fréquence et courant).
Une tension incorrecte ou un courant insuffisant peuvent causer un incendie ou un choc électrique.

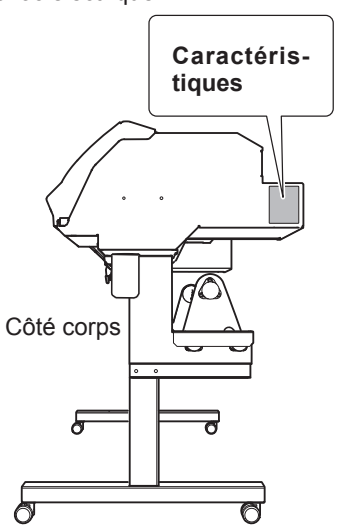

⚠ ATTENTION

Ne jamais utiliser à l'extérieur ni à un endroit où l'appareil risque d'être exposé à de l'eau ou à une humidité élevée. Ne jamais toucher l'appareil avec des mains mouillées.
Le non-respect de cette consigne risque de provoquer un incendie ou un choc électrique.

Ne jamais insérer d'objet étranger dans l'appareil. Ne jamais exposer l'appareil aux déversements de liquides.
L'insertion d'objets comme des pièces de monnaie ou des allumettes, ou le déversement de liquides dans les orifices de ventilation peuvent causer un incendie ou un choc électrique. Si un objet ou du liquide s'infiltre dans l'appareil, débrancher immédiatement le câble d'alimentation et communiquer avec le représentant Roland DG Corp. autorisé.

⚠ ATTENTION

Ne jamais placer d'objet inflammable à proximité de l'appareil. Ne jamais utiliser de produit inflammable en aérosol à proximité de l'appareil. Ne jamais utiliser l'appareil dans un endroit où des gaz peuvent s'accumuler.
Une combustion ou une explosion pourraient se produire.

Manipuler le câble d'alimentation, la fiche et la prise électrique correctement et avec soin.
Ne jamais utiliser un article endommagé, car cela pourrait causer un incendie ou un choc électrique.

Si une rallonge ou une bande d'alimentation électrique sont utilisées, s'assurer qu'elles correspondent aux caractéristiques de l'appareil (tension, fréquence et courant).
L'utilisation de plusieurs charges électriques sur une prise unique ou une longue rallonge peut causer un incendie.

Mise à la terre.
La mise à la terre peut prévenir un incendie ou un choc électrique dus à une fuite de courant en cas de défaillance.

Placer l'appareil de façon à ce que la fiche soit facile d'accès en tout temps.
Ainsi, l'appareil pourra être débranché rapidement en cas d'urgence. Installer l'appareil près d'une prise électrique. En outre, prévoir suffisamment d'espace pour que la prise électrique soit facile d'accès.

⚠ ATTENTION

S'il se produit des étincelles, de la fumée, une odeur de brûlé, un bruit inhabituel ou un fonctionnement anormal, débrancher immédiatement le câble d'alimentation. Ne jamais utiliser si un composant est endommagé.
Continuer à utiliser l'appareil peut causer un incendie, un choc électrique ou des blessures. Communiquer avec le représentant Roland DG Corp. Autorisé.

Ne pas utiliser le cordon électrique fourni avec d'autres produits.

⚠Remarques importantes à propos du câble d'alimentation, de la fiche et de la prise électrique

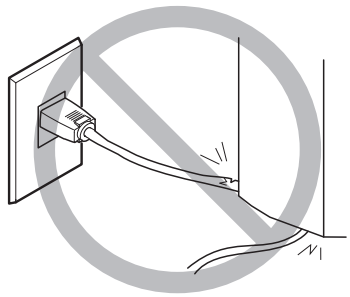

Ne jamais déposer aucun objet sur le câble, sur la fiche ou sur la prise car cela risque de les endommager.

Ne jamais laisser l'eau toucher le câble, la fiche ou la prise.

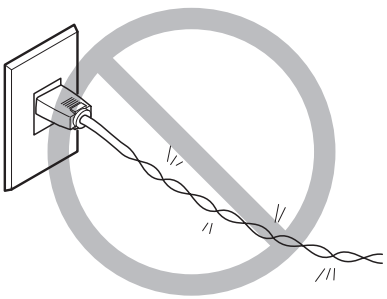

Ne jamais plier ni tordre le câble avec une force excessive.

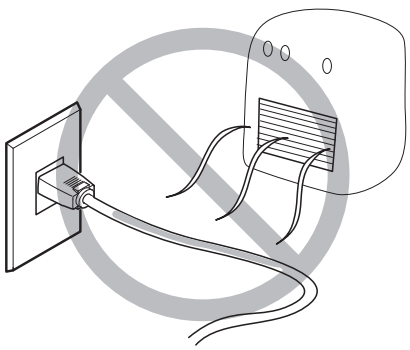

Ne jamais chauffer le câble, la fiche ou la prise.

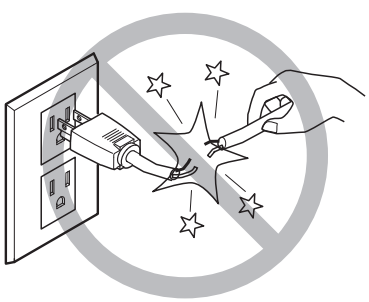

Ne jamais tirer sur le câble ou la fiche avec une force excessive.

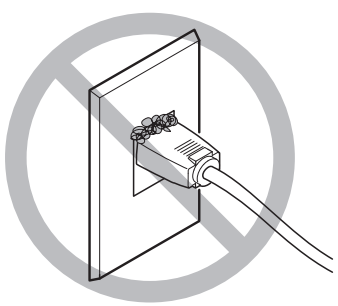

La poussière peut causer un incendie.

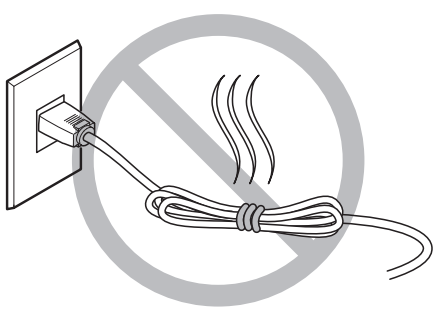

Ne jamais plier ni enrouler le câble.

⚠ L'encre, les liquides nettoyants et les liquides usées sont inflammables et toxiques

⚠ ATTENTION

Ne pas approcher une flamme nue de l'espace de travail.
L'encre et les liquides usés sont inflammables.

Ne jamais entreposer d'encre, de liquide de nettoyage ou des liquides usés dans les endroits suivants :
- un endroit exposé à une flamme nue;
- un endroit où il y a risque de température élevée;
- près d'eau de Javel, d'un autre agent d'oxydation ou de matériel explosif;
- tout endroit à la portée d'enfants.

Il y a risque d'incendie. L'ingestion accidentelle par un enfant peut présenter un risque pour la santé.

Ne jamais incinérer une cartouche d'encre.
De l'encre pourrait couler, s'enflammer et le feu se répandre à des objets proches.

⚠ ATTENTION

Ne jamais boire l'encre, le liquide de nettoyage ni les liquides usés, ne pas en respirer les vapeurs et ne pas laisser les produits entrer en contact avec les yeux ou la peau.
Cela est dangereux pour la santé.

⚠ PRUDENCE

S'assurer que le lieu de travail est bien aéré.
L'absence d'aération adéquate peut créer une situation dangereuse pour la santé ou un risque de combustion à cause des vapeurs qui émanent de l'encre.

Ne jamais soumettre une cartouche d'encre à des chocs. Ne jamais tenter d'ouvrir une cartouche d'encre.
De l'encre pourrait s'échapper.

⚠ En cas d'ingestion ou de trouble physique

- **En cas de contact avec les yeux : rincer immédiatement et abondamment à l'eau courante pendant au moins 15 minutes. Si les yeux sont toujours irrités, consulter un médecin.**
- **En cas de contact avec la peau : laver immédiatement à l'eau et au savon. En cas d'irritation ou d'inflammation de la peau : consulter un médecin.**
- **En cas d'ingestion : ne pas provoquer le vomissement et demander immédiatement l'aide d'un médecin. Provoquer le vomissement peut créer un risque de suffocation.**
- **Si l'odeur cause un trouble physique, amener la personne dans un endroit bien aéré et la faire se reposer. Si l'étourdissement ou la nausée persistent, consulter un médecin.**

⚠ Le poids de cet appareil est de 225 kg (497 lbs) Le poids du support est de 40 kg (88 lbs)

⚠ ATTENTION

Installer l'appareil à un endroit stable et plat et capable de supporter son poids.
Le poids total de l'appareil peut être de 225 kg (497 lbs) ou plus pour le modèle de 64 pouces, 190 kg (419 lbs) ou plus pour le modèle de 54 pouces, 155 kg (342 lbs) ou plus pour le modèle de 30 pouces). Installer l'appareil à un endroit inapproprié peut provoquer un accident grave comme le renversement, la chute ou l'écrasement.

Le déchargement et la mise en place doivent être faits par au moins 6 personnes on plus (4 personnes ou plus pour le modèle de 30 pouces).
Les tâches qui exigent un effort trop grand si elles sont exécutées par un petit nombre de personnes peuvent être cause de blessures. La chute d'articles très lourds peut aussi causer des blessures.

⚠ ATTENTION

S'assurer de verrouiller les roulettes de la base.
Si l'appareil devait commencer à basculer, il s'ensuivrait un accident grave, par exemple l'écrasement de membres ou du corps.

Prendre les mesures de sécurité adéquates pour l'entreposage des rouleaux de support pour s'assurer qu'ils ne rouleront pas, ne tomberont pas et ne se renverseront pas.
Il y a risque d'être écrasé par le support et de subir des blessures graves.

La manutention du support en rouleau doit être faite par deux personnes ou plus et il faut prendre des précautions pour éviter les chutes.
Tenter de soulever des objets trop lourds peut causer des blessures.

⚠ Risque d'incendie, de brûlures ou d'émissions de gaz toxiq

⚠ ATTENTION

Attention : températures élevées.
Les zones comme le séchoir chauffent. Faire preuve de prudence pour éviter un incendie ou des brûlures.

Quand aucun travail d'impression n'est en cours, retirer tout support de l'appareil ou couper l'alimentation électrique.
L'application continue de chaleur à un point unique peut causer l'émission de gaz toxiques ou créer un risque d'incendie.

⚠ ATTENTION

Ne jamais utiliser un support qui ne peut pas supporter la chaleur.
L'utilisation d'un support qui ne supporte pas la chaleur peut détériorer le support, créer un risque d'incendie ou causer l'émission de gaz toxiques.

⚠ Vignettes d'avertissement

Des vignettes d'avertissement sont apposées pour qu'il soit facile de repérer les zones dangereuses. La signification des vignettes est donnée ci-dessous. Respecter les avertissements. Ne jamais retirer les vignettes et ne pas les laisser s'encrasser.

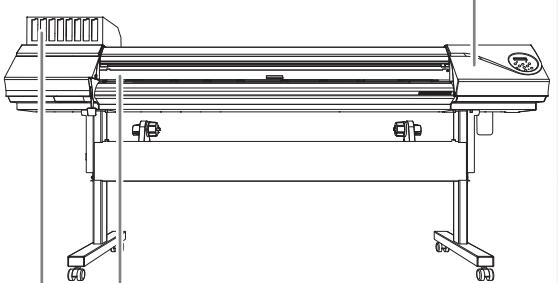

Attention : Risque de pincement
Faire attention de ne pas coincer les doigts pendant le chargement du support ou lors de la fermeture du couvercle.

Attention : Têtes d'impression mobiles
Les têtes d'impression sous le couvercle se déplacent à haute vitesse et représentent un danger. Ne jamais insérer la main ou les doigts dans l'ouverture.

Inflammable
L'encre et les liquides usés sont inflammables. Les garder loin de toute flamme nue.

L'encre est toxique
L'encre et les liquides usés sont toxiques. Éviter tout contact avec le corps. Utiliser uniquement dans un endroit bien aéré.

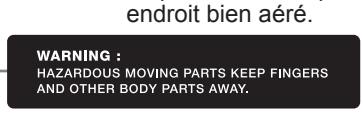

Attention : Température élevée
La platine et la surface de séchage chauffent. Être prudent pour éviter un incendie ou des brûlures.

Inflammable
L'encre et les liquides usés sont inflammables. Les garder loin de toute flamme nue.

L'encre est toxique
L'encre et les liquides usés sont toxiques. Éviter tout contact avec le corps. Utiliser uniquement dans un endroit bien aéré.

Attention : Têtes d'impression mobiles
N'insérez pas votre main au-dessous du couvercle avant. La tête d'impression se déplace à haute vitesse à l'intérieur du couvercle avant, ce qui est très dangereux.

Attention : voltage élevé
Il peut être dangereux de retirer le couvercle puisqu'il y aurait des risques de chocs électriques ou d'électrocution à cause du voltage élevé.

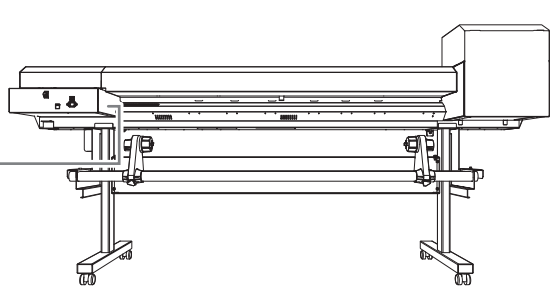

Important Notes on Handling and Use

This machine is a precision device. To ensure the full performance of this machine, be sure to observe the following important points. Failure to observe them may not only result in loss of performance, but may also cause malfunction or breakdown.

Printer Unit

This machine is a precision device.

- **Handle carefully, and never subject the machine to impact or excessive force.**
- **Never needlessly put your hand or fingers inside the cover, the ink-cartridge ports, or other internal areas of the machine.**

Install in a suitable location.

- **Install in a location having the specified temperature and relative humidity.**
- **Install in a quiet, stable location offering good operating conditions.**

The print heads are delicate.

- **Never needlessly touch or allow media to scrape them. Failure to handle with care may cause damage.**
- **The print heads may be damaged if allowed to dry out. The machine prevents desiccation automatically, but improper operation may render this feature inoperative. Operate properly, as specified in this manual.**
- **Never allow the machine to stand with an ink cartridge removed. Remaining ink in the printer may harden and clog the print heads.**
- **The print heads are components that wear out. Periodic replacement is required, with the frequency of replacement depending on use.**

This machine becomes hot.

- **Never cover the ventilation holes with cloth, tape, or anything else.**

Ink Cartridges

Ink cartridges come in various types.

- **Use a type that is compatible with the printer. Also, be sure to use only genuine items from Roland DG Corp.**

Never subject to impact or attempt to disassemble.

- **Never drop or shake forcefully. The impact may rupture the internal pouch and cause the ink to leak.**
- **Never attempt to disassemble.**
- **Never attempt to refill the ink.**
- **If ink gets on your hands or clothing, wash it off as soon as possible. Removal may become difficult if allowed to stand.**

Storage

- **Store unopened in a well-ventilated location at a temperature of -20 to 40°C (-4 to 104°F).**

Chapter 2
Basic Operation

Prepare the Media 32
Type of Media 32
Usable Media 33
Switch On! 34
Switch On! 34
The Power-Saving Feature (Sleep Mode) 34
Loading Media 35
Loading Roll Media 35
Loading the Sheet Media 42
Performing the Initial Adjustment (Correcting for Misalignment in Bidirectional Printing More Precisely) 44
Setup of Media 46
About [Media Setting] Menu 46
Setup of Media ([Media Setting] Menu) 46
Outputting 57
Setting the Output-Start Location 57
Printing Tests and Cleaning 58
Important Note on Cutting 60
Setting the Cutting Test and the Blade Force 61
Getting Ready to Receive Data from a Computer 62
Starting Output 63
Pausing and Canceling Output 64
Cutting Off the Media 64
Switch Off 66
Switch Off 66

Prepare the Media

Type of Media

In this manual, the paper used for output is called "media." There are the following main two media types used in this machine.

- Roll media: Media wound onto a paper tube
- Sheet media: Media not wound onto a paper tube such as standard-size media

Various paper quality types of roll media and sheet media are selectable according your purpose. For detailed information about each media, contact your media supplier. Media is also available from our following website.

http://www.rolanddg.com/

Usable Media

This machine cannot necessarily print every kind of media. When selecting media, be sure to carry out testing in advance to make sure that satisfactory printing quality is obtained.

Size

Width (for both roll media and sheet media)

64-inch model: 210 to 1,625 mm (8.3 to 64 inches)
54-inch model: 210 to 1,371 mm (8.3 to 54 inches)
30-inch model: 182 to 762 mm (7.2 to 30 inches)

A) Cuttable media thickness (for both roll media and sheet media)

0.08 mm–0.22 mm (0.3 to 1 mil) (depending on media composition)

B) Maximum media thickness (for both roll media and sheet media)

Printing only:1.0 mm (4 mil)
When performing cutting: 0.4 mm (1.6 mil)

Roll outer diameter

210 mm (8.2 inches)

Paper tube (core) inner diameter

76.2 mm (3 inches) or 50.8 mm (2 inches)

Note: To use 2 inches media, the optional media flanges are required. For information about optional items, contact your authorized dealer or us.

Roll Weight

64-inch model: 40 kg (88 lbs)
54-inch model: 30 kg (66 lbs)
30-inch model: 25 kg (55 lbs)

Note: When using the take-up unit, conditions are dependent on the usable media of the take-up unit.

Other Conditions

Media such as the following cannot be used.

- Media whose end is attached to the paper tube (core)
- Media which is severely warped or which has a strong tendency to reroll
- Media that cannot withstand the heat of the media heating system
- Media whose paper tube (core) is bent or crushed
- Media that bends under its own weight when loaded
- Media on a sagging roll
- Media that is rolled unevenly

Switch On!

⚠WARNING **When output is not being performed, remove any loaded media or switch off the sub power.**
The continued application of heat at a single location may cause the release of toxic gases from the media or pose a fire hazard.

Procedure

❶ 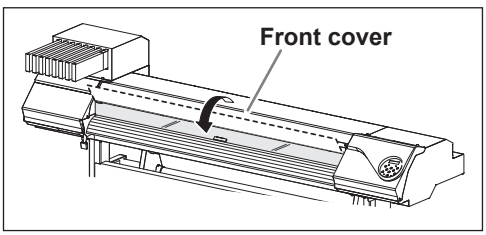

Close the front cover.

❷ 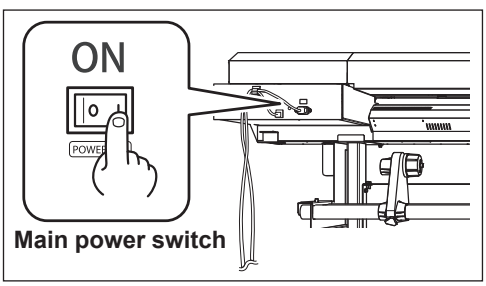

Turn on the main power switch.

❸ 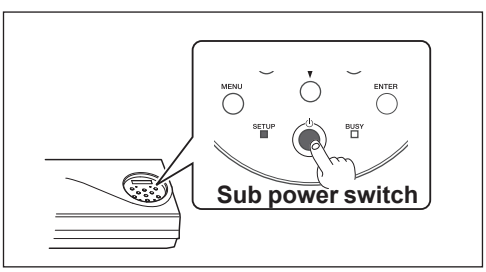

Press the sub power button.
Note: For installation of the ink cartridge and selection of the language displayed on the display screen, refer to "Setup Guide."

The Power-Saving Feature (Sleep Mode)

This machine is provided with a power-saving feature that switches to a low-power "sleep mode" when a fixed interval passes with no operation. The factory default for the time after which the machine switches to the sleep mode is 30 minutes. When the machine is in the sleep mode, the sub power switch flashes slowly. Using the operation panel or performing operations such as sending output data from the computer (when media is loaded) restores the machine to its normal mode.
This setting of sleep mode can be changed. However, we recommend setting the activation time for the sleep mode to 30 minutes or less to reduce power consumption and prevent problems such as overheating.

☞ P. 106, "Correcting for Misalignment in Bidirectional Printing"

Loading Media

Loading Roll Media

⚠CAUTION **Load roll media correctly.**
Otherwise the media may fall and cause injury.

⚠CAUTION **Roll media weighs about 40 kg (88.2 lbs). To avoid injury, handle with care.**

⚠CAUTION **Never load media that weighs over 40 kg (88 lbs) for the 64-inch model, 30 kg (66 lbs) for the 54-inch model, and 25 kg (55 lbs) for the 30-inch model).**
The machine may fail to withstand the weight and tip over or cause the media to fall.

1. Install the media to the media holder.

Note: The media holder of this machine is exclusive use for the media of paper tube (core) inner diameter 3 inches. To use 2 inches media, the optional media flanges are required. For information about optional items, contact your authorized dealer or us.

❶ **① Open the front cover.**
② Move the media clamps to the left and right ends respectively.

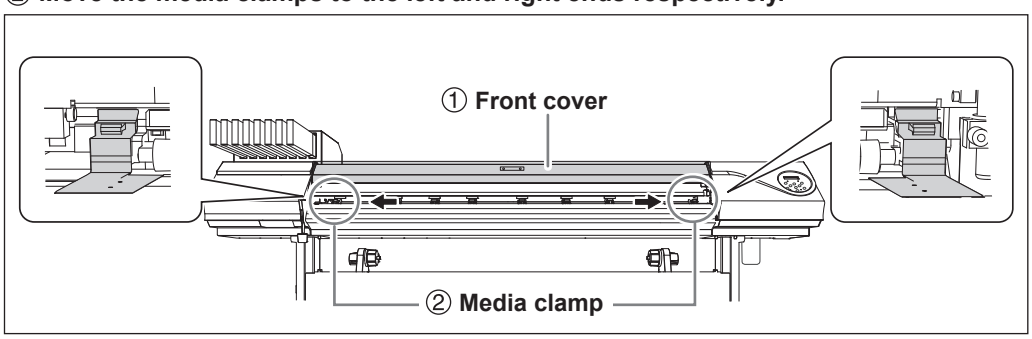

❷ **① Loosen the retaining screws of the media holders.**
② Move the media holders all the way to the left and right.

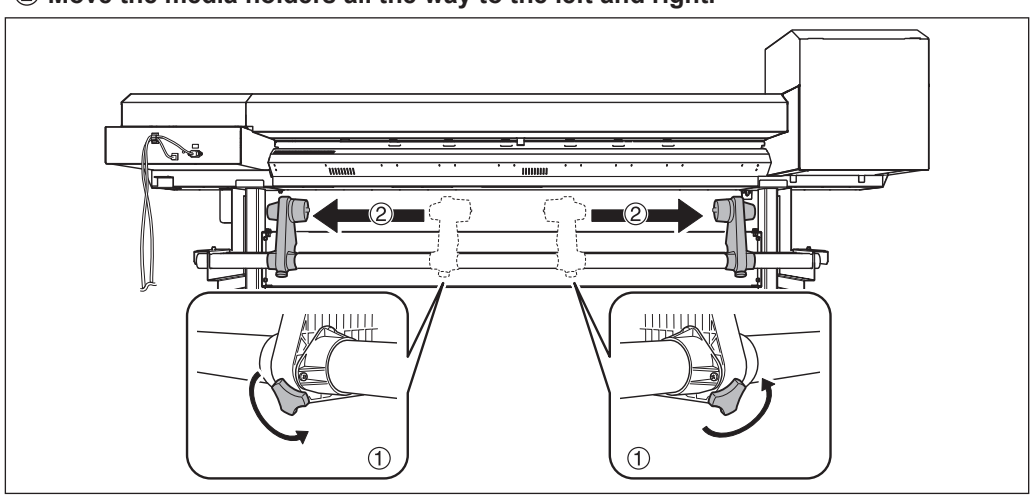

❸ **① Fit the paper tube (core) onto the end cap of the media holder [Left].**
Do not secure the media holder now.
② Move the media holder [Right] and fit the end cap onto the paper tube core of the media.
Fit it securely to prevent the media from easy loose.

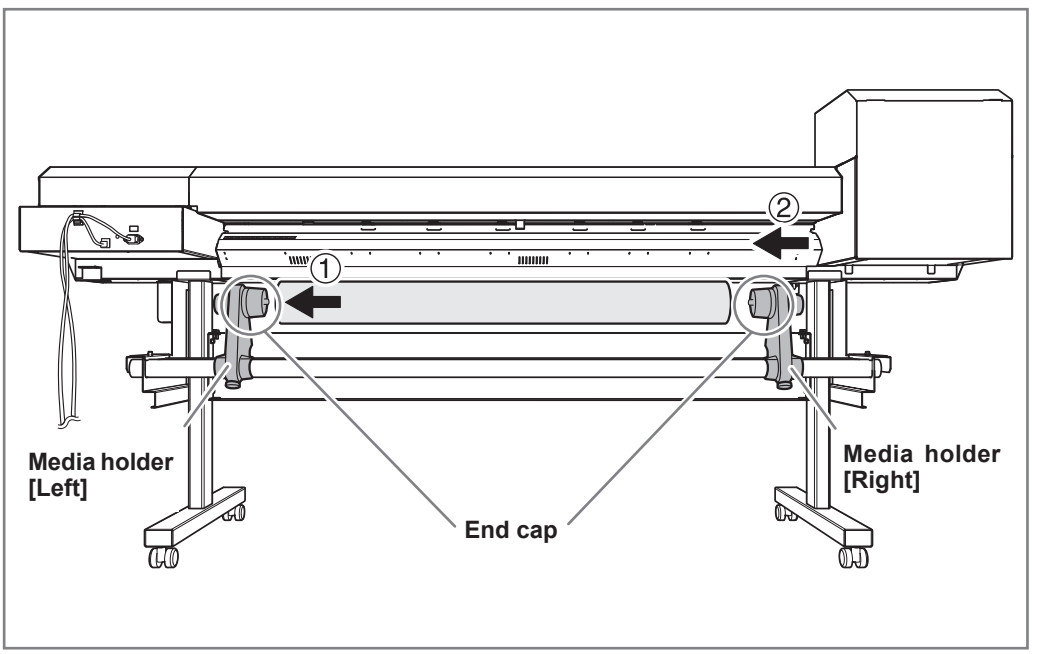

IMPORTANT! **Install conforming to the procedures.**
Load the media while the left media holder is positioned close to the left edge, as shown in the figure. Also, never secure the media holder in place before loading the media. Loading media without performing these steps in the proper order may make smooth media feed impossible or yield poor printing results.

How to use the media flanges for the paper tube inner diameter 2 inches
* The media flanges for the paper tube inner diameter 2 inches are optional items.

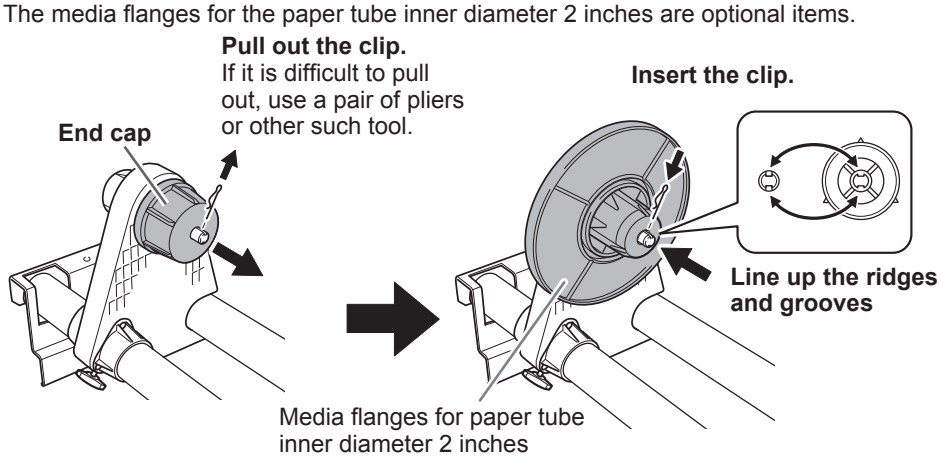

4 Hold the outer side of the media holder [Left] and position the left and right side edges of the media to match the grit patterns.

When deciding the position, hold the both sides of media holders from the outer sides and move it. Do not hold the media directly to move.

⚠CAUTION **Never attempt this operation while holding any location other than the one specified.**

The media may fall from the media holder, resulting in injury.

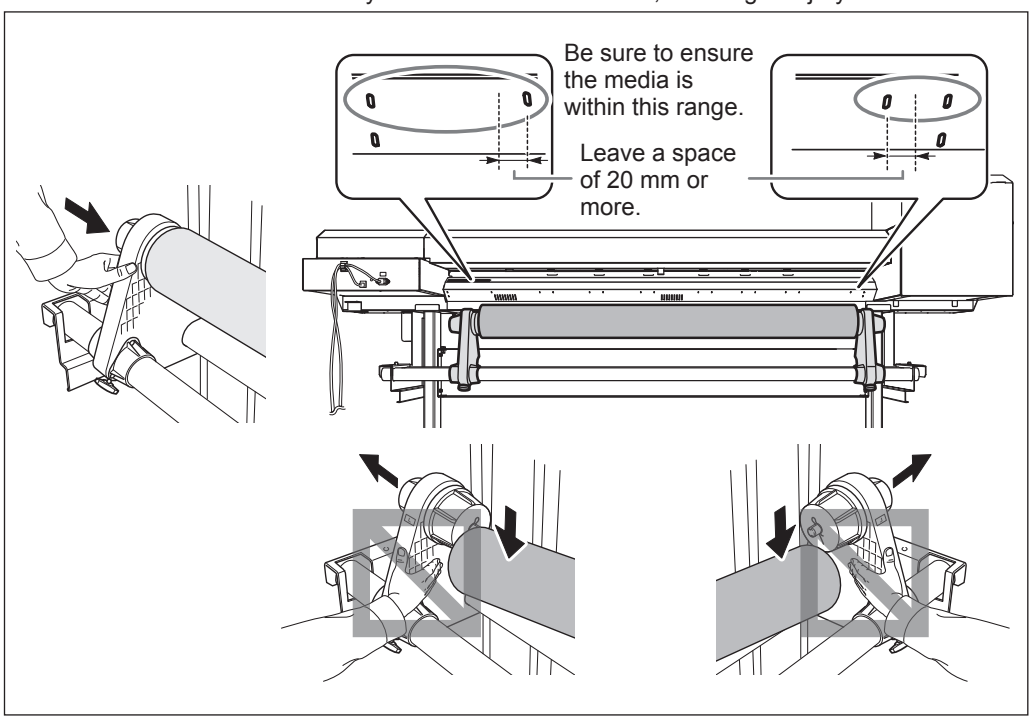

IMPORTANT! **Decide the left and right side positions of the media finally at this step.**

After this procedure is completed, if the left and right side positions do not fit the proper position when securing the media with pinch rollers, go back to this step to redo this procedure. Printing quality is affected due to skew media feed, if you hold the media only to readjust the position forcibly.

5 Secure the media holder by tightening the securing screws slightly.

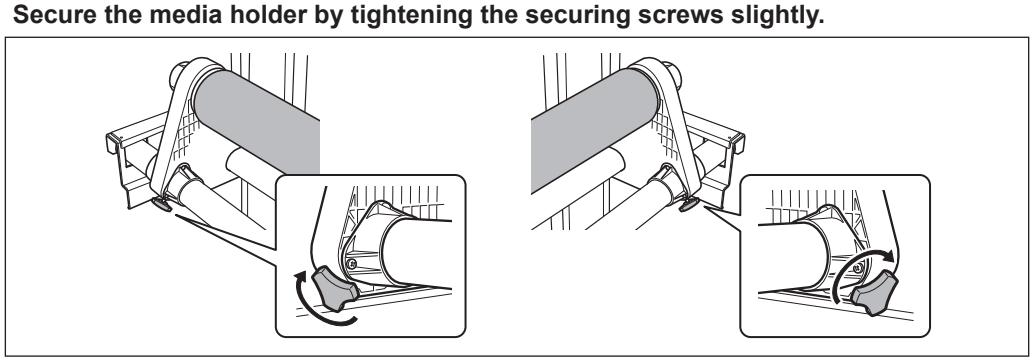

2. Pass the media through the printer and secure the media holders.

1 Pass the leading edge of the media between the pinch rollers and the grit rollers.

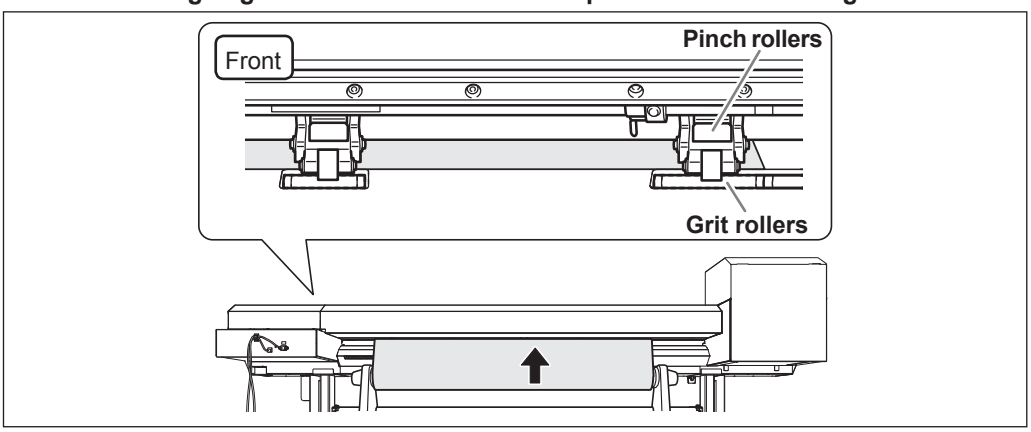

2 Pull out the media over the platen.

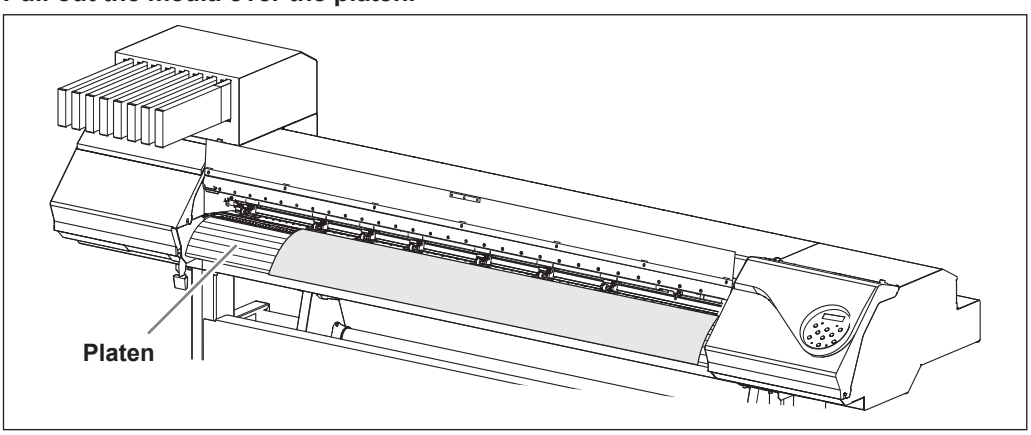

3 Check both edges of the media are placed on the grit rollers.

Be sure to place the right edge of the media on the right end grit rollers.

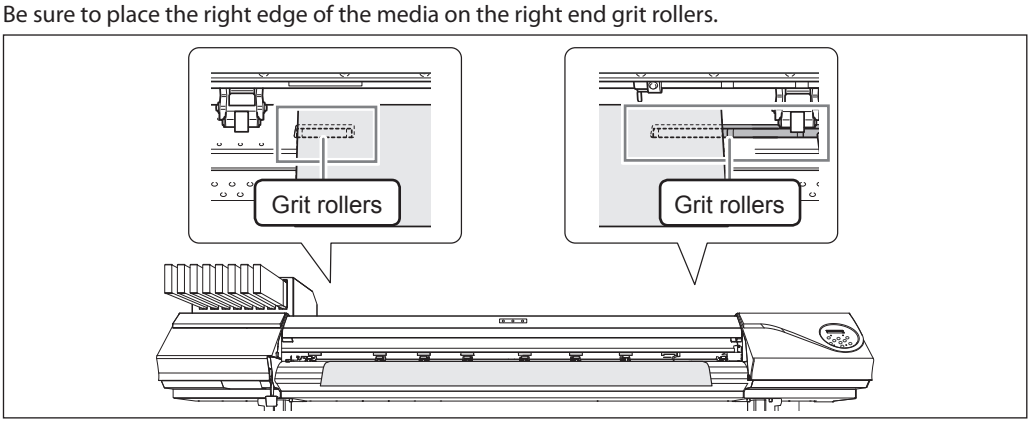

❹ Place the left and right pinch rollers (affixed with blue stickers) on both edges of the media.

Place them on the positions from the media edges by about 10 mm respectively.

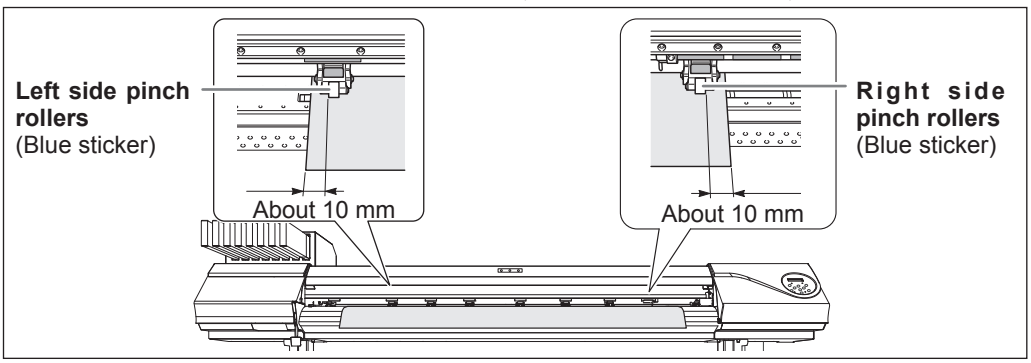

IMPORTANT!

If you want to readjust the media position at this step, go back to the procedure 1 and redo the procedure *1.*-❹. Printing quality is affected due to skew media feed, if you hold the media only to readjust the position forcibly.

❺ Place the pinch rolls over all the grid rollers covered by the media.

The grit patterns can be found at the place where grit rollers are located. Be sure to remove the remaining middle pinch rollers.

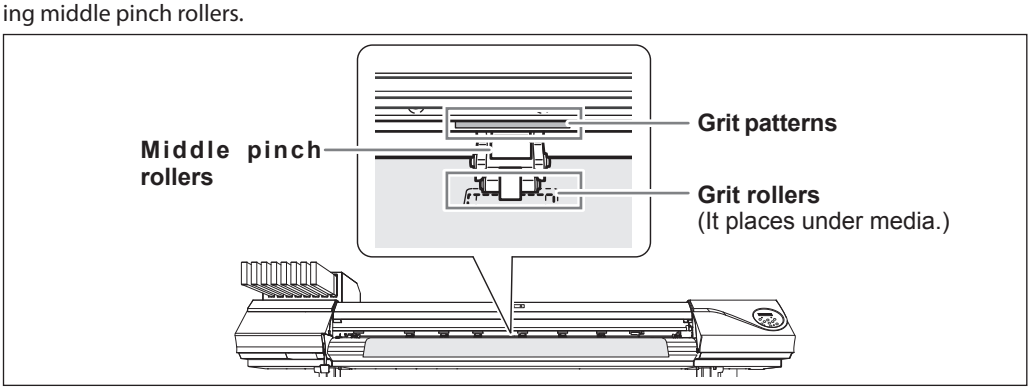

Attaching and Detaching Middle Pinch Rollers

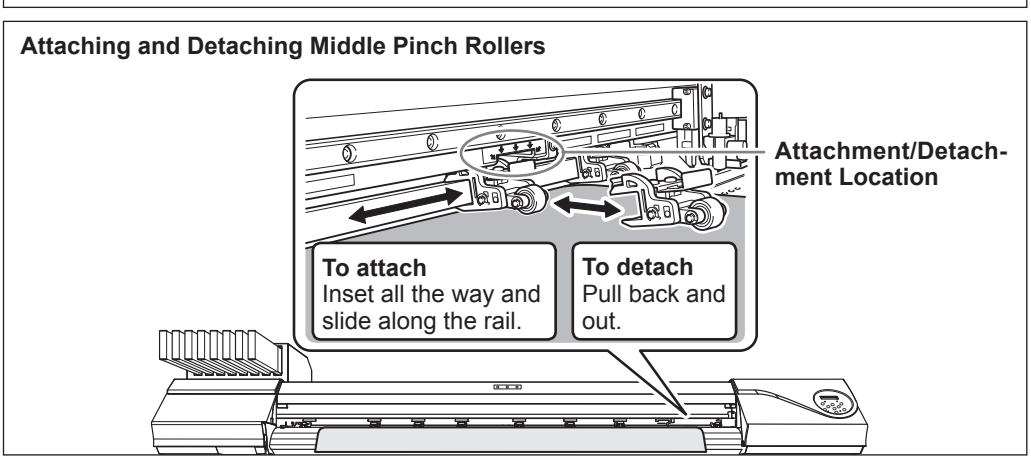

6 **Hold the media at the center and pull it out, being sure to keep it straight and all areas of the media to be taut.**

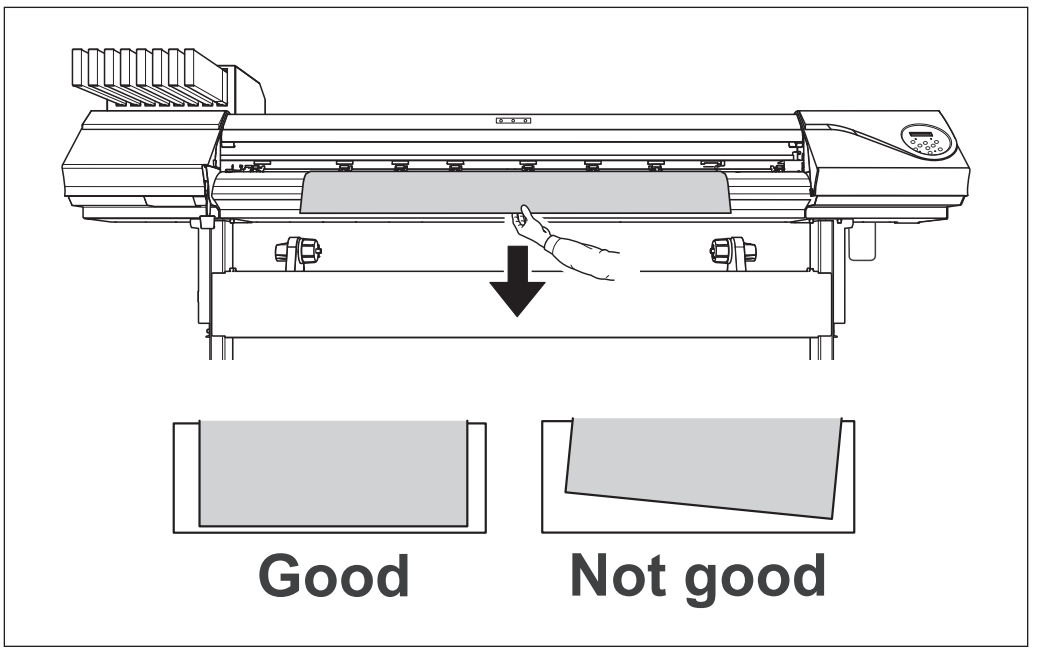

7 **Lower the loading lever to secure the media in place.**

SETUP starts to flash, and then the screen shown in the figure appears.

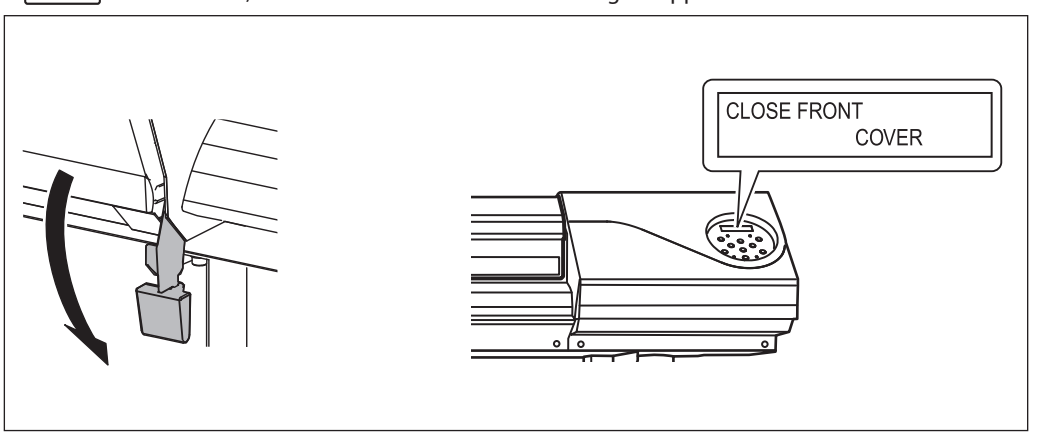

3. Clamp the edges of the media with the media clamp.

❶ **① Move the left and right media clamps above the edges of the media.**
② Line up the edges of the media with the centers of the holes of the media clamps.
When you're performing cutting only, never use the media clamps.
☞ P. 60, "Important Note on Cutting"

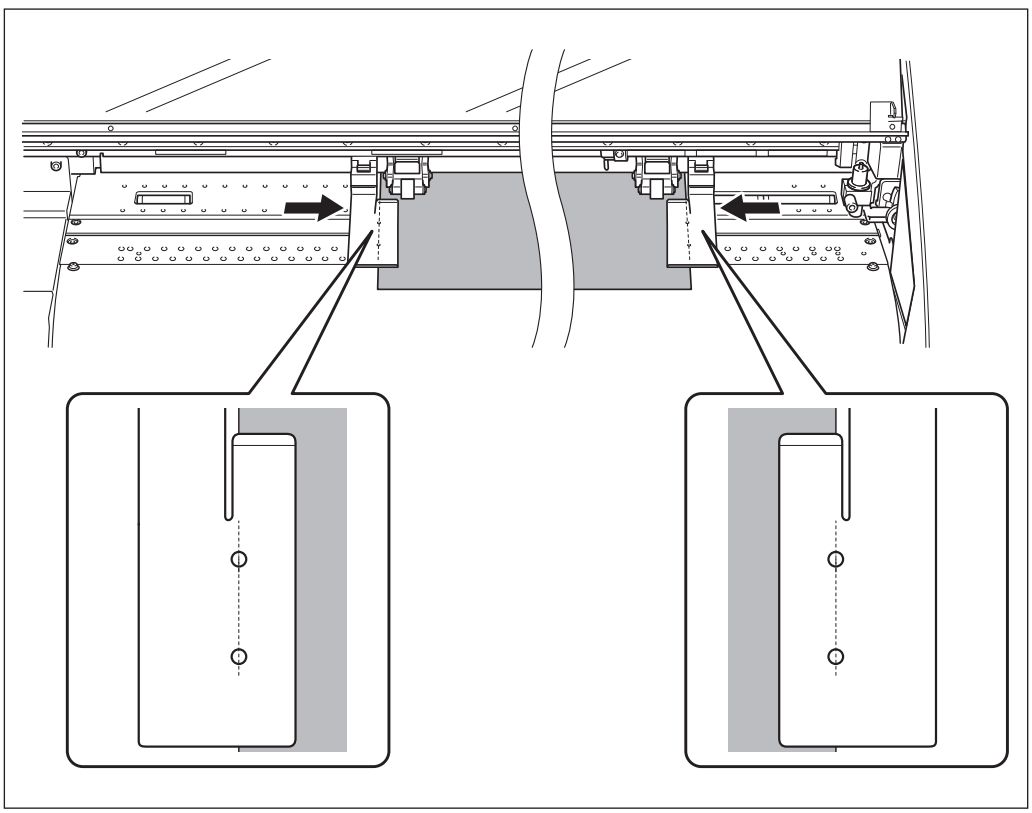

❷ **Close the front cover.**
When the front cover is closed, the print-head carriage moves and detects the width of media. This operation is called initialization. When initialization ends, SETUP remains steadily lighted, and the printable width is displayed on the display screen. This completes loading of the media.

IMPORTANT! **Remove when not using roll media.**
If roll media is allowed to stand unused in a loaded state for an extended period, the media may sag. This can cause poor printing quality and motor errors, so be sure to remove and store such media when not in use.

Loading the Sheet Media

Procedure

❶ Move the media holders to the left and right.

Move them to a location where they don't disturb the media when the media is hung down from the rear of the machine. If they disturb the media, remove them with the shaft. For information on how to remove, refer to "Setup Guide."

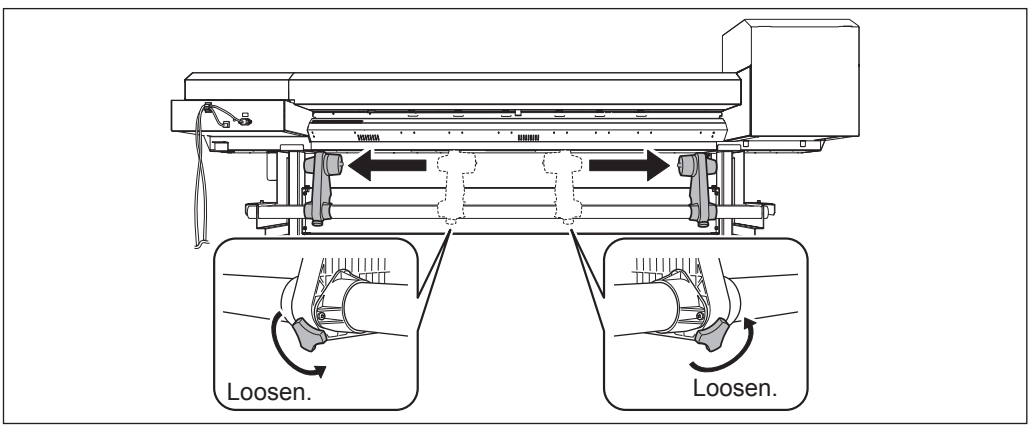

❷ Pass the media through the printer and secure the media holders.

☞ Procedure 2 ❶ to ❺ of P. 38, "Pass the media through the printer and secure the media holders."

❸ Align the front edge of the media with the location shown in the figure.

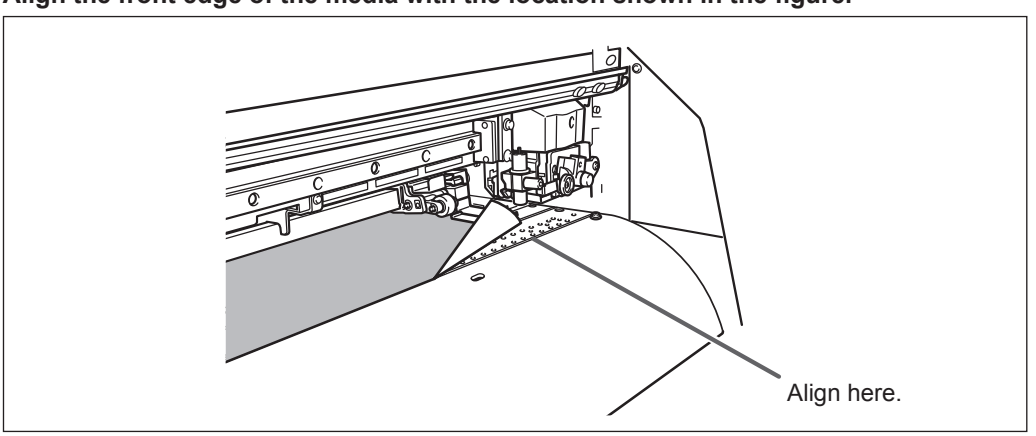

4 Lower the loading lever to secure the media in place.

SETUP starts to flash, and then the screen shown in the figure appears.

When you're performing cutting only, never use the media clamps.

☞ P. 60, "Important Note on Cutting"

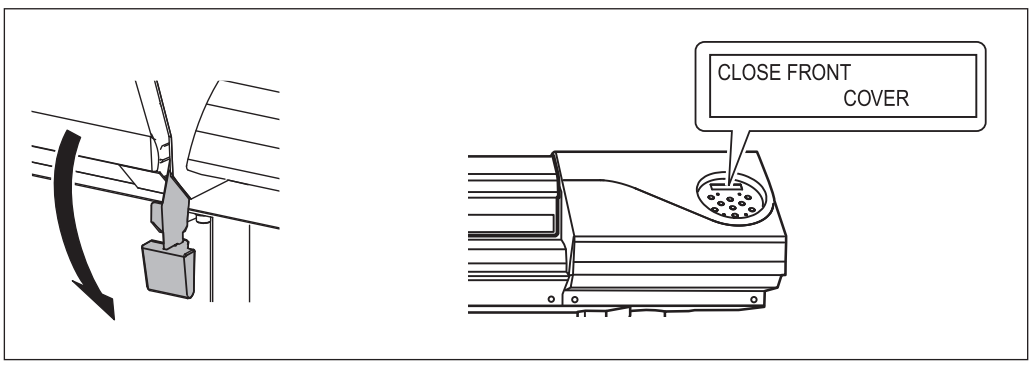

5 ① Move the left and right media clamps above the edges of the media.
② Line up the edges of the media with the centers of the holes of the media clamps.

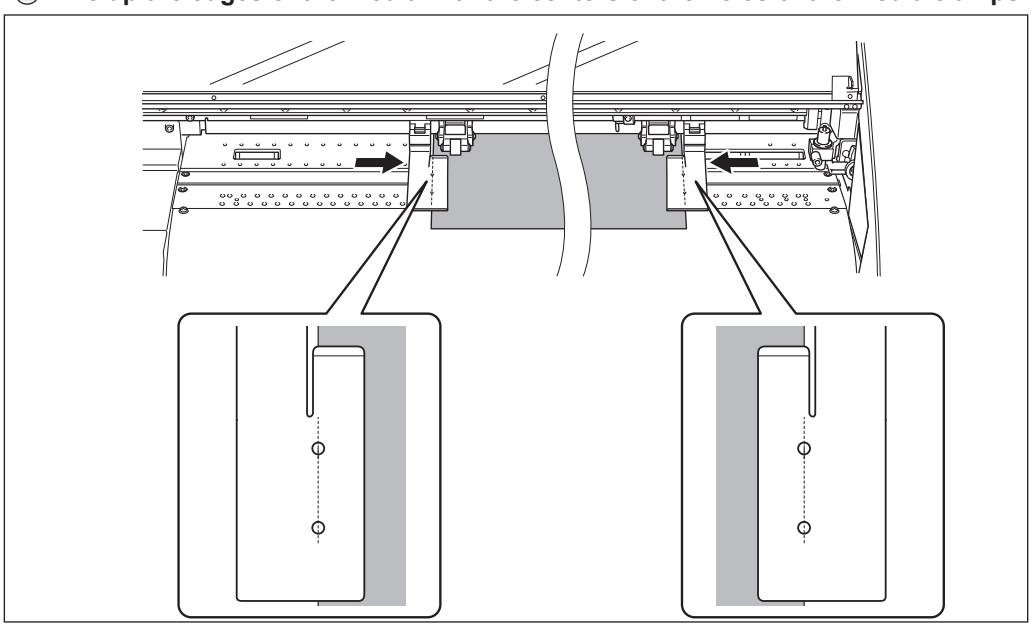

6 Close the front cover.

When the front cover is closed, the print-head carriage moves and detects the width of media. This operation is called initialization. When initialization ends, SETUP remains steadily lighted, and the printable width is displayed on the screen. This completes loading of the media.

Performing the Initial Adjustment (Correcting for Misalignment in Bidirectional Printing More Precisely)

Perform the initial adjustment (correction for misalignment in bidirectional printing more precisely) of this machine. In the following case, perform this adjustment.

- When using this machine for the first time
- When changing the media to use for the first time
- When further correction is required to improve printing, such as when simple correction is performed for misalignment in bidirectional printing (☞ P. 109, "Adjusting Head Height to Match Media Thickness")

Procedure

❶ 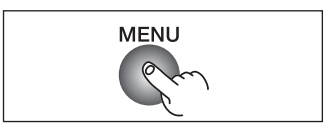

Press (MENU).

❷ MENU ◀◆▶
ADJUST BI-DIR ▶

Press (▼) several times until the screen shown on the left appears.
Press (►), and then (▲).

❸ ADJUST BI-DIR ◀◆▶
DETAIL SETTING ▶

Press (►).

❹ DETAIL SETTING ◀◆▶
TEST PRINT ↵

Press (ENTER).
A test pattern is printed.
When printing ends, then press (▼).

❺ ADJUST BI-DIR ◀◆▶
DETAIL SETTING ▶

Press (►).

❻ NO.3 NO.4 ◀◆▶
+ 6 + 4 ↵

Press (▲) (▼) to select a correction value of No.1.
Press (►).
Press (▲) (▼) to select a correction value of No.2.
Press (►).

To decide a Correction Value
Choose the value that produces the least misalignment of 2 lines.

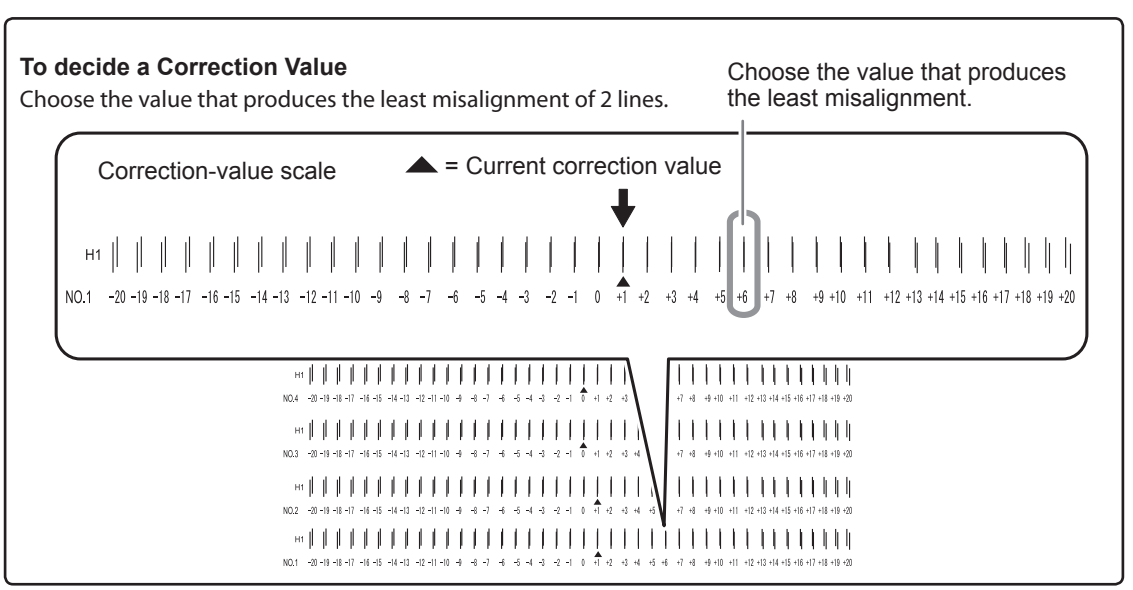

❼ 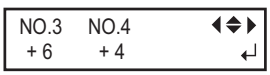

Press ▲ ▼ to select a correction value of No.3
Press ►.
Set correction values of No.4 in the same manner.

❽ 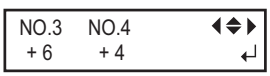

When correction value settings end, press ENTER.

❾ 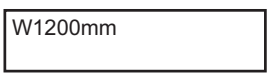

Press MENU to go back to the original screen.

Setup of Media

About [Media Setting] Menu

To ensure the optimal output according to the media size and type, various setting items are provided in this machine. However, it is hard work to perform these settings one by one referring to this document. So, this machine provides the [Media Setting] menu that guides these settings in the interactive mode. Using this menu, you can set all of the basic settings only by setting according to the instructions on the display.
Since the setting details can be stored as the preset menu, you can promote your operation efficiently saving the setup steps when using the same type of media. Once storing the basic settings as the preset, you can do fine adjustment according to need.
The items set through the [Media Setting] menu can be also set individually.

Setup of Media ([Media Setting] Menu)

- Only Printing: Perform the procedure *1.* to *6.*,and *10.*, *11.*
- Printing & Cutting: Perform all the procedure *1.* to *11.*

Note: If any setting is not needed for each setting item, you can go to the next menu by selecting [NEXT].

1. Starting the [Media Setting] menu.

❶ **Load media.**
Check that no sagging is found on the media. If any sagging exists, the followed correction value settings do not work effectively.
☞ P. 35, "Loading Media"

❷ 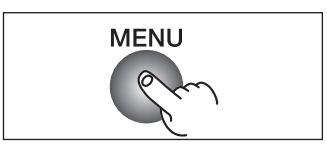

Press (MENU) **.**

❸

When the left figure is displayed, press (ENTER) **.**

2. Setting the temperature of print heater and dryer.

❶ 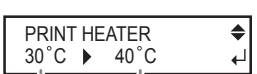

Current preset temperature
Temperature to be set

Use (▲) (▼) **to set the temperature.**
Recommended temperature: 40 °C (104 °F)
Press (ENTER) **to enable the setting.**

❷

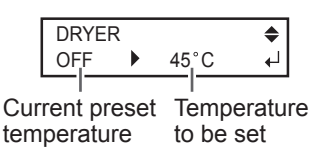

Use ▲ ▼ to set the temperature.
Recommended temperature: 45 °C (113 °F)
Press ENTER to enable the setting.

For the individual setting method of this setting item and the description, refer to ☞ P. 101, "Making the Temperature Setting for the Media Heating System"

To cancel the setting

Procedure

❶ **Press MENU during the setting.**

❷

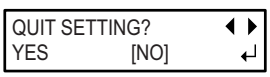

Press ◄ to select [YES].
Press ENTER.

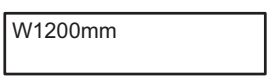

The screen returns to the screen shown at the left.
By selecting [NO], the screen returns to the screen displayed when you pressed MENU.

3. Adjusting the head height

❶

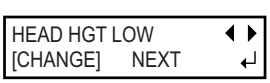

Press ◄ to select [CHANGE].
Press ENTER to enable the setting.

❷

When the left figure is displayed, open the front cover.

❸

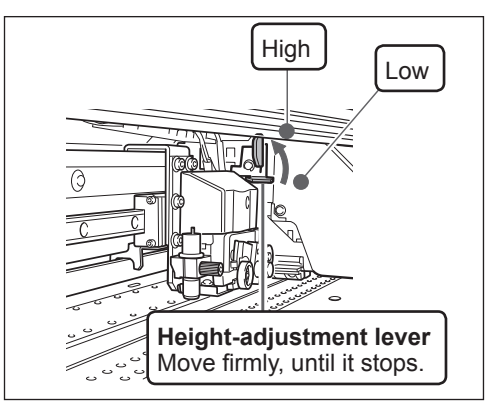

Move the height-adjustment lever to adjust the head height.
When moving to the [High] direction, the buzzer sounds twice, and to the [Low] direction, the buzzer sounds once.

POINT!
Normally set to [Low]. For the media that is wrinkled and comes loose from the platen, set to [High].

❹ **Close the front cover.**
For the individual setting method of this setting item and the description, refer to ☞ P. 109, "Adjusting Head Height to Match Media Thickness"

4. Perform the position correction of feed direction (alleviate horizontal stripes)

POINT!

Feed direction means the feed direction of the media. Perform the correction adjusting to the media in advance because horizontal stripes are more likely to occur during printing when the movement distance of the media changes subtly depending on the media's thickness.

❶

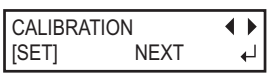

Press ◄ to select [SET].
Press ENTER to enable the setting.
The test pattern of feed correction is output.

❷

When the left figure is displayed, press ENTER.

❸

Current correction value

Value to be set

Use ▲ ▼ to set the correction value.
Press ENTER to enable the setting.

To decide a Correction Value

Select the value to make the upper/lower rectangular gap and overlap smallest.

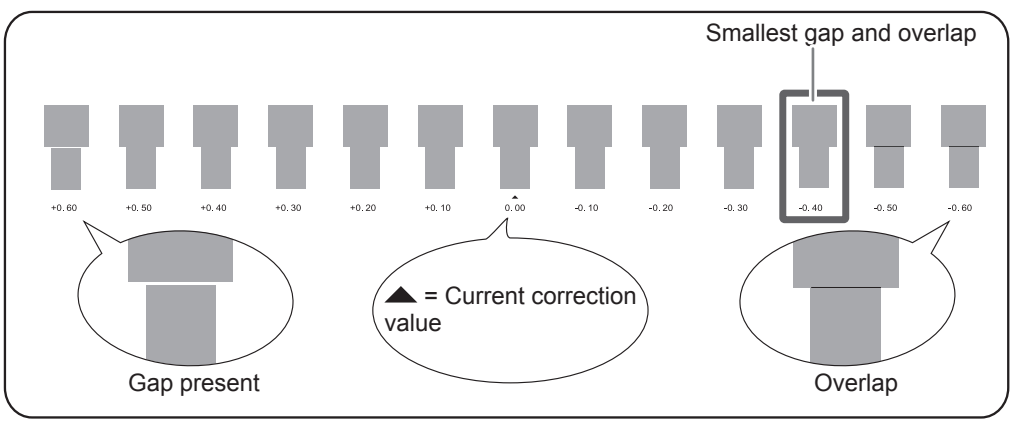

❹

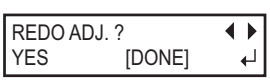

[To confirm again/To adjust again]
Press ◄ to select [YES].
Press ENTER to enable the setting.
The test pattern of feed correction is output again Go back to the procedure ❸ and set again.

[To go to the next after correction is completed]
Press ► to select [DONE].
Press ENTER to enable the setting.

For the individual setting method of this setting item and the description, refer to ☞ P. 107, "Alleviating Horizontal Bands and the Like (Feed Correction Function)"

5. Performing the correction for misalignment in bidirectional printing

POINT!

This machine prints by the bidirectional mode (in which the heads perform printing during both their outbound pass and return pass). This printing method is called "Bidirectional Printing." This method offers the advantage of being able to shorten output times, but subtle misalignment occurs during the outbound and return passes. The procedure to correct this and eliminate misalignment is "Bidirectional Correction."

❶ ADJUST BI-DIR
[SET] NEXT

Press ◄ to select [SET].
Press ENTER to enable the setting.
The test pattern of bidirectional correction is output.

❷ INPUT
ADJ. VALUES

When the left figure is displayed, press ENTER.

❸ ADJUST BI-DIR
0 ▶ +6

Use ▲ ▼ to set the correction value.
Press ENTER to enable the setting.

Current correction value — Value to be set

To decide a Correction Value

Choose the value that produces the least misalignment of 2 lines.

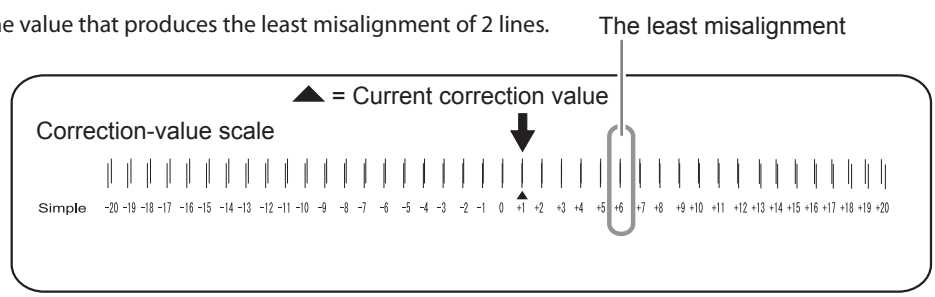

❹ REDO ADJ. ?
YES [DONE]

[To confirm again/adjust again]
Press ◄ to select [YES].
Press ENTER to enable the setting.
The test pattern of bidirectional correction is output again. Go back to the procedure ❸ and set again.

[To go to the next after correction is completed]
Press ► to select [DONE].
Press ENTER to enable the setting.

For the individual setting method of this setting item and the description, refer to ☞ P. 106, "Correcting for Misalignment in Bidirectional Printing"

6. Deciding to perform the setting for cutting or not

CUT CONFIG ◄ ►
[SET] NEXT ↵

[Only Printing]
Press ► to select [NEXT].
Press ENTER to enable the setting.
Go to Procedure *10.*

[Print & Cut]
Press ◄ to select [SET].
Press ENTER to enable the setting.
Go to Procedure *7.*

7. Setting the blade force

POINT!

For high-quality cutting, perform a cutting test to check the cutting quality for the media and adjust the blade force.

❶

CUT FORCE ◄ ►
[SET] NEXT ↵

Press ◄ to select SET].
Press ENTER to enable the setting.

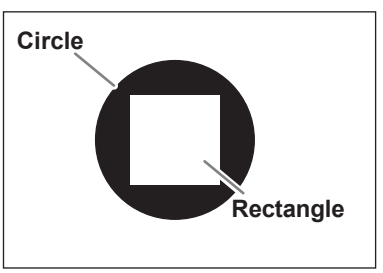

The test pattern is cut. Circle and rectangle are cut. Peal off the two shapes.

❷

CONTINUE ADJ. ? ◄ ►
[YES] DONE ↵

[Two shapes are peeled off separately]
Press ► to select [DONE].
Press ENTER to enable the setting.
Go to Procedure *8.*

[Two shapes are peeled off together/backing paper is also cut]
Press ◄ to select [YES].
Press ENTER to enable the setting.
Go to Procedure ❸.

❸

Current correction value

Value to be set

Use ▲ ▼ to adjust the blade force.
If two shapes are peeled off together ⇨ raise the blade force.
If backing paper is cut too ⇨ reduce the blade force.
Press ENTER to enable the setting.
Cut the test pattern again. Check the result.

❹

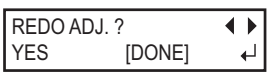

[Two shapes are peeled off separately]
Press ► to select [DONE].
Press ENTER to enable the setting.
Go to Procedure *8.*

[Two shapes are peeled off together]
Press ◄ to select [YES]
Press ENTER to enable the setting.
Cut the test pattern again. Go back to the procedure ❸ and set again.

For the individual setting method of this setting item and the description, refer to ☞ P. 116, "Fine-Tuning the Cutting Conditions"

8. Correcting misalignment for printing and cutting

POINT!

Subtle misalignment between the printing and cutting positions may occur due to the thickness of the media or the head height. We recommend making correction to match the media you're using.

❶

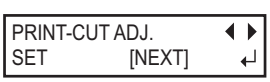

Press ◄ to select [SET].
Press ENTER to enable the setting.
The test pattern (P&C1) is printed and cut. The test pattern is printed at three locations on the media: at the two edges and in the center.

❷ **Check the test pattern condition.**

To check the test pattern (P&C1)
Check to make sure that the printing position and the cutting position are aligned.

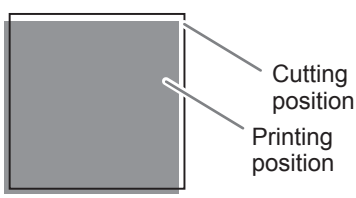

Cutting position and printing position are misaligned.

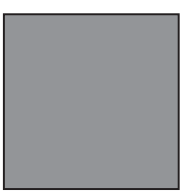

Cutting position and printing position are aligned.

❸

```
CONTINUE ADJ. ?
[YES]        DONE
```

[Cutting position and printing position are aligned]
Press ► to select [DONE].
Press ENTER to enable the setting.
Go to Procedure *9*.

[Cutting position and printing position are not aligned]
Press ◄ to select [YES].
Press ENTER to enable the setting.
The test pattern (P&C2) for setting the correction values is printed and cut.
Go to Procedure ❹.

❹

```
INPUT
   ADJ.      VALUES
```

When the left figure is displayed, press ENTER.

❺ **Check the correction values from the test pattern condition.**

To check the test pattern (P&C2)
The point where the cutting line intersects the correction-value scale is the correction value. Check the scan direction and the feed direction respectively.

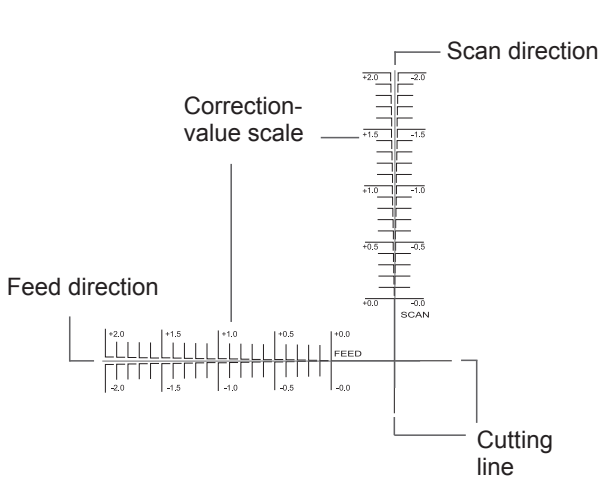

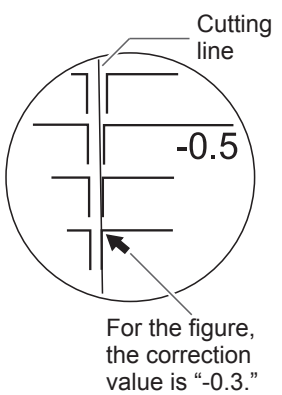

❻

```
F :- 0.30  ▶  - 0.30mm
S :  0.00  ▶  - 0.20mm
```

Current correction value

Value to be set

Use ▲ ▼ to set the correction value of feed direction (F).
Use ◄ ► to set the correction value of scan direction (S).
Press ENTER to enable the setting.
The test pattern (P&C1) is printed and cut again. Check the condition of test pattern to check that the printing position and the cutting position are aligned.

❼

REDO ADJ. ?	◄ ►
YES [DONE]	↵

[Cutting position and printing position are aligned]
Press ► to select [DONE].
Press ENTER to enable the setting.
Go to Procedure *9*.

[Cutting position and printing position are not aligned]
Press ◄ to select [YES].
Press ENTER to enable the setting.
Go back to Procedure ❻ and set the correction values again. Repeat Procedure ❻ and ❼ until the optimal alignment is got.

For the individual setting method of this setting item and the description, refer to ☞ P. 123, "Correcting Misalignment of the Printing and Cutting Positions During Cutting"

9. Correcting misalignment for printing and cutting position when using crop marks.

POINT!

When you remove the printed media, and then reload it and perform cutting, use the crop marks. For this case, correction is to be performed because the positioning of printing and cutting may be misaligned even when you're using crop marks depending on the composition of the media.

❶

CROP-CUT ADJ.	◄ ►
[SET] NEXT	↵

[To perform consecutive printing and cutting]
Press ► to select [NEXT].
Go to Procedure *10*.

[To perform printing and cutting separately]
Press ◄ to select [SET].
Press ENTER to enable the setting.
The test pattern (C&C1) is printed and cut. Go to Procedure ❷.

❷ **Check the test pattern condition.**

To check the test pattern (C&C1)
Check to make sure that the printing position and the cutting position are aligned.

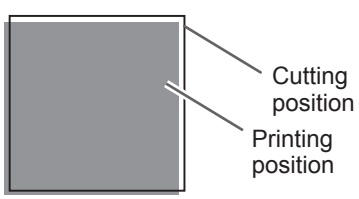

Cutting position and printing position are not aligned

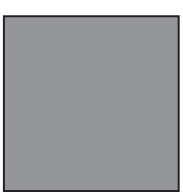

Cutting position and printing position are aligned.

❸

CONTINUE ADJ. ? ◀ ▶
[YES] DONE ↵

[Cutting position and printing position are aligned]
Press ► to select [DONE].
Press ENTER to enable the setting.
Go to Procedure *10*.

[Cutting position and printing position are not aligned]
Press ◄ to select [YES].
Press ENTER to enable the setting.
The test pattern (C&C2) for setting the correction values is printed and cut.

❹

INPUT
ADJ. VALUES ↵

When the left figure is displayed, press ENTER.

❺ **Check the correction values from the test pattern condition.**

To check the test pattern (C&C2)
The point where the cutting line intersects the correction-value scale is the correction value. Check the scan direction and the feed direction respectively.

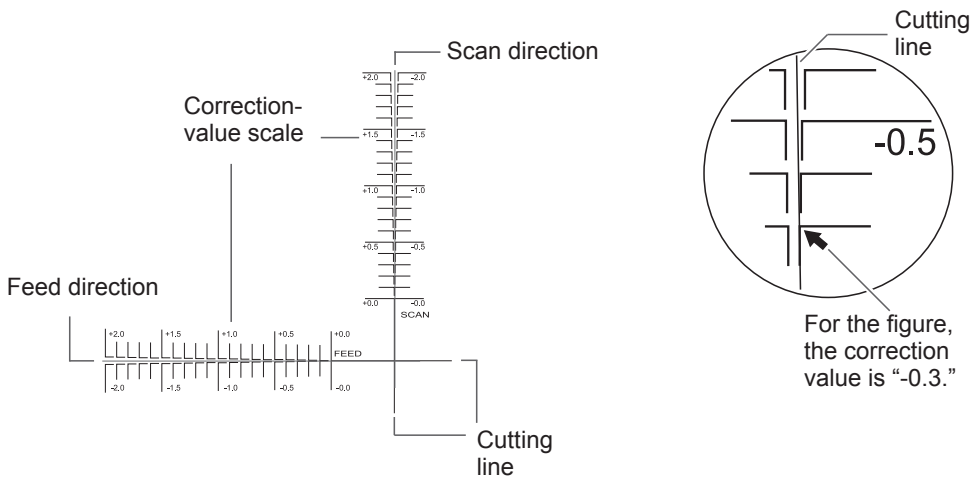

❻

F :- 0.30 ▶ - 0.30mm
S : 0.00 ▶ - 0.20mm ↵

Current correction value
Value to be set

Use ▲ ▼ to set the correction value of feed direction (F).
Use ◄ ► to set the correction value of scan direction (S).
Press ENTER to enable the setting.
The test pattern (C&C1) is printed and cut again. Check the condition of test pattern to check that the printing position and the cutting position are aligned.

❼

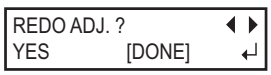

[Cutting position and printing position are aligned]
Press ► to select [DONE].
Press ENTER to enable the setting.
Go to Procedure *10*.

[Cutting position and printing position are not aligned]
Press ◄ to select [YES].
Press ENTER to enable the setting.
Go back to Procedure ❻, fine-tune the adjustment value, and then repeat Procedure ❻ and ❼ until the optimal alignment is got.

For the individual setting method of this setting item and the description, refer to ☞ P. 131, "Correcting Misalignment for Printing and Cutting When Using Crop Marks".

10. Setting the drying method and time after printing

❶

Press ▲ ▼ to select the item.
Press ENTER to enable the setting.

POINT! Drying Method after Printing
After the 1st page is printed, set that the media should be fed until the trailing edge of the printed area is positioned directly on the dryer. To make sure to dry the entire printed area, select [ENABLE]. If [DISABLE] is selected, the trailing edge of the printing area is not fed to the dryer unless you continue with a subsequent printing operation.

For the individual setting method of this setting item and the description, refer to ☞ P. 104, "Drying the Trailing Edge of the Printing Area on the Dryer"

❷

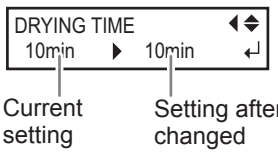

Press ▲ ▼ to set the drying time.

Example of setting time (general guide):

*The setting time varies according to the settings of type of media and printing quality.

Condition: Output accompanying pull-back; use the middle pinch rollers; non-coated vinyl media

Setting time: about three minutes

Press ENTER to enable the setting.

POINT! Drying Time after Printing

Set the drying time after the 1st page is printed. The next operation is not started until the set time passes.

For the individual setting method of this setting item and the description, refer to ☞ P. 104, "Setting the Drying Time After Printing".

11. Saving the setting as preset

❶

Press ◄ to select [SAVE].
Press ENTER to enable the setting.

If you select "NEXT", all settings you have made are not saved as a preset. However, they remain as the current settings in the machine.

❷

Use ▲ ▼ to select [Destination to Save].

You can select one of NAME1 to 8.

Press ENTER to enable the setting.

❸

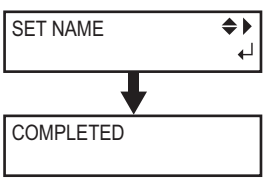

Use ▲ ▼ to select characters.
Use ► to move the next character.
Select the following characters in the same way.

You can enter up to 15 characters.

Press ENTER to enable the setting.

For the individual setting method of this setting item and the description, refer to ☞ P. 98, "Fully Utilizing Preset Function"

This completes the operation of the [Media Setting] menu.

Setting the Output-Start Location

You can set the output-start location at any location you prefer. (You can output if you do not set this.) Note, however, that this setting must be made for each individual page.

Procedure

1. **Open the front cover.**

2. 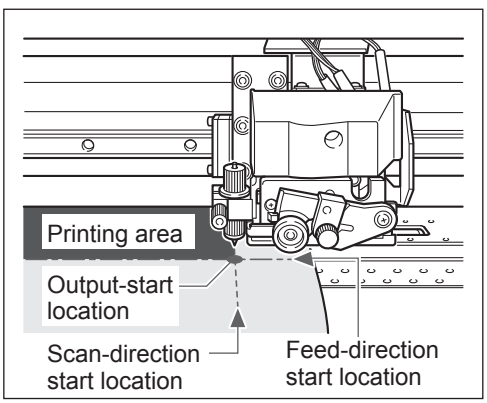

   Use ▲ ▼ ◄ ► to move the center of the blade with the output-start location.
   Only cutting carriage moves.

3. **When the location is set, press FUNCTION.**

4.

   When the left figure is displayed, press ENTER to enable the setting.

   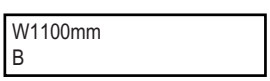

   BASE remains steadily lighted and when the screen displays the character "B" together with the output-possible width at the location, setting is completed.

POINT!

Note, however, that the left and right positions are not restored to their defaults for test patterns. If you're using the separately available media take-up unit, never adjust by pressing ▲. Doing so may pull the media with undue force, resulting in an error or malfunction.

Printing Tests and Cleaning

Before you carry out actual printing, we recommend performing a printing test to ensure no dot drop-out occurs. If dot drop-out occurs, perform cleaning of the print heads (Normal Cleaning).

1. Setting a test print direction

* The factory default setting of the test print direction is "FEED." When performing printing tests successively, you can select "FEED" or "SCAN" as the print direction applied to the second and later tests. However, when the optional media take-up system is used, "Feed" is applied regardless of the setting of the test print direction.

☞ P. 134, "Using Media Take-Up System"

❶ **Press MENU.**

❷ 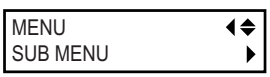

Press ▼ several times until the screen shown on the left appears.

❸

Press ►, and then ▲ to display the left figure.
Press ►.

❹

Press ▲ ▼ to select "SCAN."
Press ENTER to enable the setting.

❺ 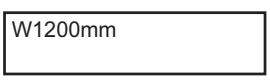

Press MENU to go back to the original screen.

2. Setting the output-start location

❶ **Setting the Output-start Location.**

☞ P. 57, "Setting the Output-Start Location"

POINT!

When performing the tests successively, you don't need to set the output-start location for the second and later tests. However, if one of the following is conducted, the default output-start location takes effect. Set the desired output-start location again as necessary.

- Cutting of sheet
- Printing of output data you created, and cutting
- Cancellation of setup

❷ **Press FUNCTION.**

❸ 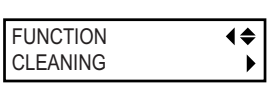

Press ▼ to display the left figure.
Press ►.

❹ CLEANING / TEST PRINT

Press ENTER.

A test pattern is printed. If dot drop-out occurs, go to procedure *3*.

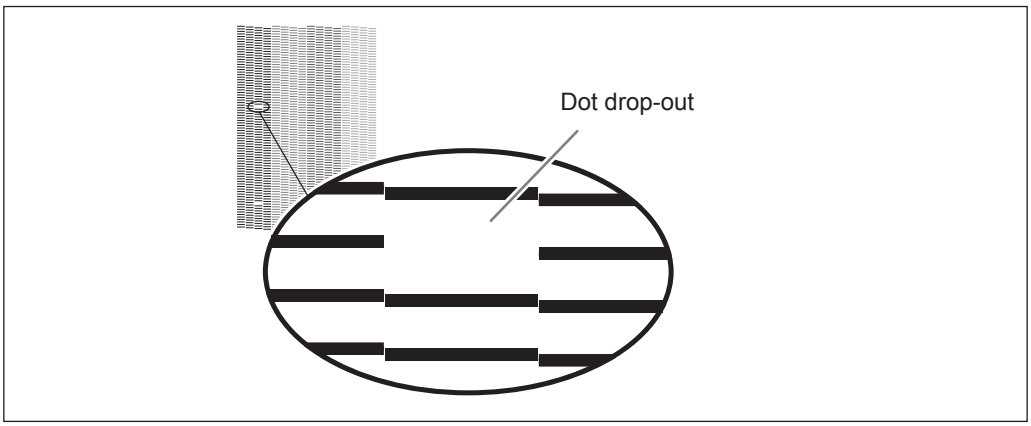

❺ W1200mm

If no dot drop-out occurs, press FUNCTION to go back to the original screen.

3. Perform a normal cleaning

❶ **Press FUNCTION.**

❷ FUNCTION / CLEANING

Press ▼ to display the left figure.
Press ►, and then ▼.

❸ CLEANING / NORMAL

Press ENTER.

Normal cleaning starts.

CLEANING...
>>

↓

CLEANING / NORMAL

When it finishes, the screen shown in the figure appears again.

❹ W1200mm

Press FUNCTION to go back to the original screen.

❺ **Perform a printing test on procedure *2*. again to make sure the dot drop-out has been corrected.**

If the problem persists, try performing cleaning a second time. If the printer has been used for a long period, the problem may persist even after two or three-cycle cleaning. Then try cleaning using a different method.

☞ P. 74, "When Normal Cleaning Is Not Effective"

Important Note on Cutting

When You're Performing Cutting Only, Never Use the Media Clamps.

When you're performing cutting only, remove the media clamps or move to the locations where they don't clamp the media.

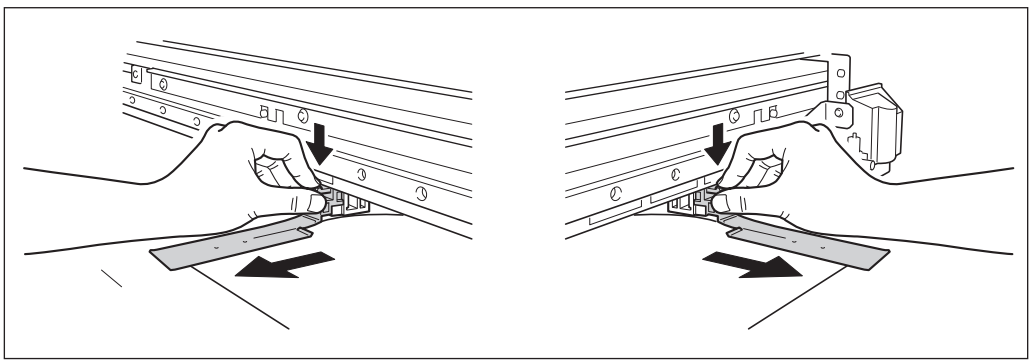

When Using the Roll Media and Only Performing Cutting, Let the Media Hang Down To the Rear of the Machine. (Or Set the [PREFEED] Menu to "ENABLE.")

This prevents a motor error or fall of the roll because the media is pulled with excessive force.

For the [PREFEED] menu, refer to ☞ P. 115, "Preventing Pulling of the Media with Undue Force When Performing Cutting Only".

Turn the media by hand to pull out the necessary length from the roll.
If the media is hanged down from the rear of the machine, you can leave the [PREFEED] function "DISABLE."

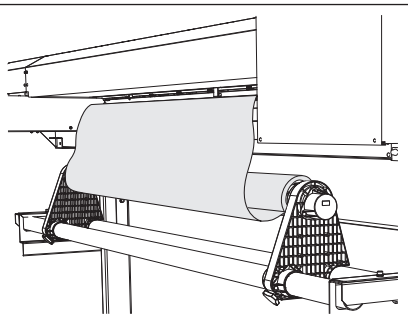

When You’re Performing Printing Followed Immediately by Cutting (Print and Cut), Then Before You Start Cutting, Allow the Ink to Dry Sufficiently.

Use your software RIP to make the setting for the drying time. For information on how to make the setting, refer to the documentation for the software RIP you're using. The drying time varies according to the media.

Setting the Cutting Test and the Blade Force

For high-quality cutting, then before you perform actual cutting, we recommend carrying out a cutting test to check the cutting quality for the media. Adjust the blade force depending on the cutting quality.

1. Carrying out the cutting test

❶ **Close the front cover.**

❷ **Press ◄ ► ▲ ▼ to move the cutting carriage to the location where you want to carry out the cutting test.**
You can freely set the location for the cutting test.

❸ **Press FUNCTION.**

❹
```
FUNCTION
CUT CONFIG
```
Press ▼ several times until the screen shown on the left appears.
Press ►.

❺
```
CUT CONFIG
TEST CUT
```
Press ENTER.
The test pattern is cut.

❻

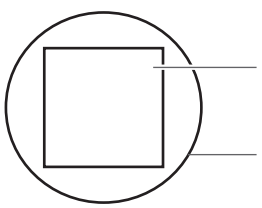

Peel off the cut shapes to verify the cutting quality.
[Two shapes are peeled off separately]
You do not need to perform the setting because the blade force is appropriate.
[Two shapes are peeled off together/backing paper is also cut]
Go to the next Procedure to set the blade force.

2. Setting the blade force

❶
```
FUNCTION
CUT CONFIG
```
Press ▼.

❷
```
CUT CONFIG
FORCE
```
Press ►.

❸
```
FORCE
50 gf  ▶60 gf
```
Press ▼ ▲ to select the value.
[Two shapes are peeled off together]
Raise the blade force.
[Backing paper is also cut]
Reduce the blade force.
Press ENTER to enable the setting.

❹
```
W1200mm
```
Press FUNCTION to go back to the original screen.
At the [CUT CONFIG] menu, you can also make settings for other cutting conditions in addition to the blade force. Refer to the following pages.

☞ P. 116, "Fine-Tuning the Cutting Conditions"

Getting Ready to Receive Data from a Computer

When ☞ P. 35, "Loading Media", ☞ P. 46, "Setup of Media" are completed, get ready to receive the data from a computer.

⚠CAUTION **Never touch the print heads while output is in progress.**
The print heads move at high speed. Contact may cause injury.

Procedure

1. **Close the front cover.**
2. **Make sure [SETUP] stays steadily lit.**
   If the light does not come on, lower the loading lever.
3. **Wait until [HEATER] stays steadily lit.**
4. **Make sure the top menu is displayed.**
   If the top menu is not displayed, press (MENU), then press (◄).

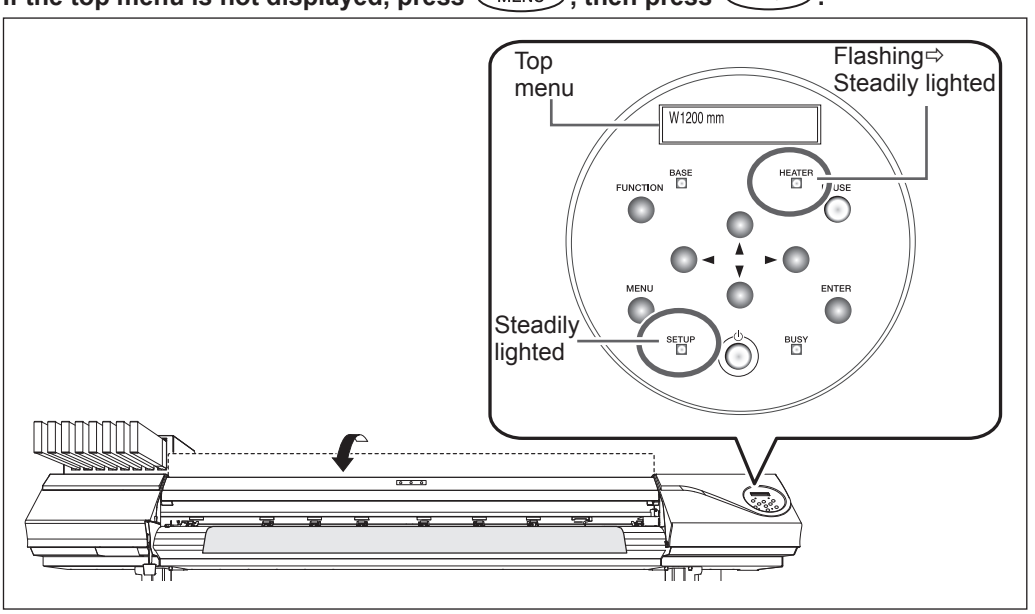

POINT!

Output Is Not Possible in These Situations

- The machine does not run when the front cover is open.
- Never open it when printing is in progress. Doing so interrupts printing.
- Data from the computer is not accepted when [SETUP] is dark.
- When "ON" is set to the print heater and/or the dryer, Printing does not start until [HEATER] lights up.
- Data from the computer is not accepted when you are not at the top menu.

Starting Output

When the operation of ☞ P. 62, "Getting Ready to Receive Data from a Computer" is completed, you can start output.
To output, the following procedure is required.

① Creating output data

Create the output data using the application software like Adobe Illustrator and like that. For information on how to create the data, refer to the documentation of your application software.

② Sending the output data to this machine using the software RIP.

Use the included software RIP "Roland VersaWorks." For information on how to install and use Roland VersaWorks, refer to "Roland VersaWorks Quick Start Guide" and HELP of Roland VersaWorks.
If using the white ink and metallic silver ink, refer to "Special Color Ink Guide."

IMPORTANT! **Points that must be observed**

- Be sure to set the media clamps during printing. Otherwise the edges of the media may warp and catch on the print heads.
- During output, never touch the media that's already been discharged. Doing so may obstruct media feed or cause the media to rub against the heads, which may result in a paper jam or damage to the heads.
- Keep the loading lever raised when the machine is not in use.

POINT!

If Ink Runs Out

When ink runs out, a warning beep sounds and a slot number of which ink runs out is displayed on the display screen. Exchange the ink cartridge.
☞ P. 69, "How to Replace Ink Cartridges"

Before you perform lengthy printing, check the amount of ink remaining in the ink cartridges.

Before you perform lengthy printing, check the amount of ink remaining in the ink cartridges. When ink runs out and printing is paused, the coloring at the seam may be altered when printing resumes.
☞ P. 68, "Checking for Remaining Ink"

Pausing and Canceling Output

You can pause and cancel printing before it finishes. We do not recommend resuming printing because horizontal stripes are produced at the place where output stopped.

Procedure

1. **Press (PAUSE) before output finishes.**
   This pauses printing operation.
   Press (PAUSE) again to resume printing.
   To cancel the output, go the next Procedure without pressing (PAUSE) in this procedure.

2. | TO CANCEL, HOLD
DOWN PAUSE KEY |
   |---|

   When the screen shown in the figure appears, hold down (PAUSE) for one second or longer.
   This cancels printing operation.

3. **Stop sending the output data from the computer.**

Cutting Off the Media

Procedure

1. **Detach the left and right media clamps.**

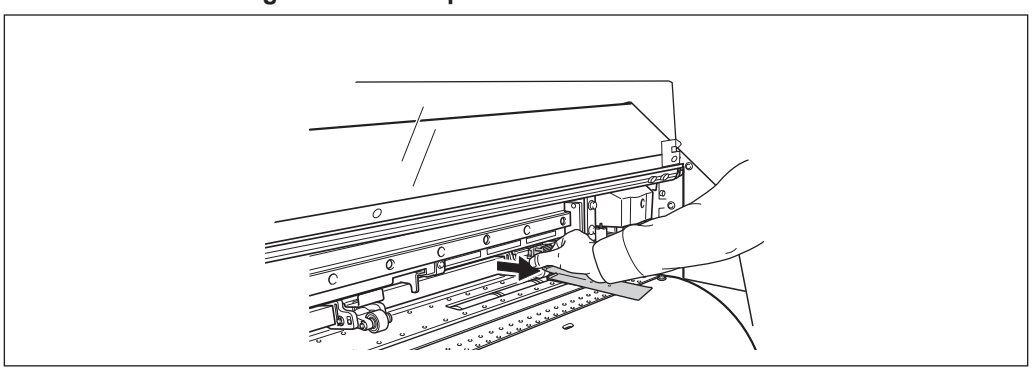

2. **Close the front cover.**
3. **Make sure [SETUP] lights up.**
4. **Press (FUNCTION).**
5. | FUNCTION ◆▲▼
SHEET CUT ↵ |
   |---|

   Press (▼) several times until the screen shown on the left appears.
   Press (ENTER).
   The media is cut off.

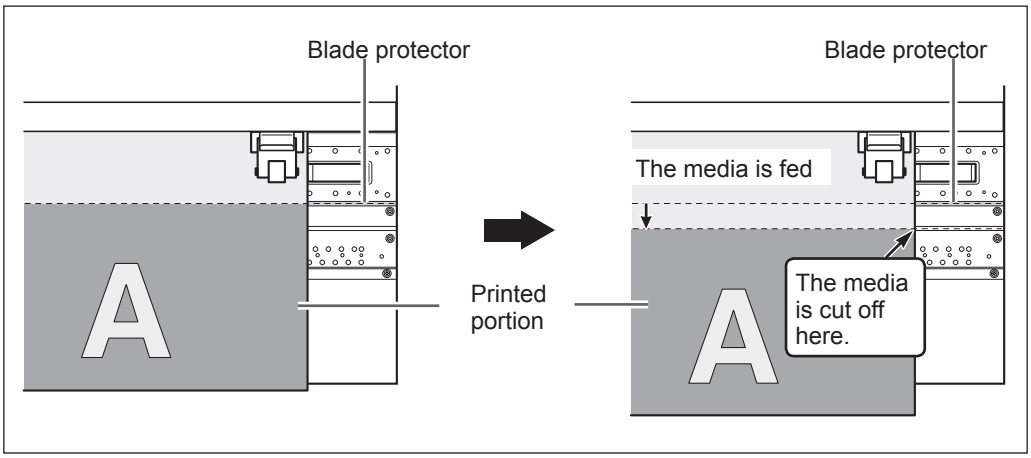

You can make the setting in the software RIP for automatic media cutoff after printing or cutting has finished. For information on how to make the setting, refer to the documentation for the software RIP you're using.

IMPORTANT! **Cut-off Operations**

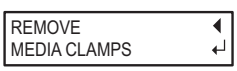

When the media clamps are attached, the screen shown in the figure appears. Open the front cover and detach the left and right media clamps and press ENTER.

- Be sure to detach the media clamps. Performing cutoff with the media clamps remaining attached may cause the operation to be interrupted due to detection of the media clamps.
- If the media clamps are present on the machine when the setting to execute automatic cutoff of the media is made on the RIP software computer, the media clamps are detected and no cutoff operation is performed.
- Before you're performing cutoff, never use ▲ to pull the media back. Unless the end of the media has been pulled out to a location to the front of the platen, cutoff may not be performed smoothly.

IMPORTANT! **Give Attention to Media Composition**

- For some types of media, cutoff is not possible.
- Some types of media may remain on the platen after cutoff. If the media remains on the platen, remove it by hand.

Switch Off

⚠WARNING **When output is not being performed, remove any loaded media or switch off the sub power.**
The continued application of heat at a single location may cause the release of toxic gases from the media or pose a fire hazard.

Procedure

❶

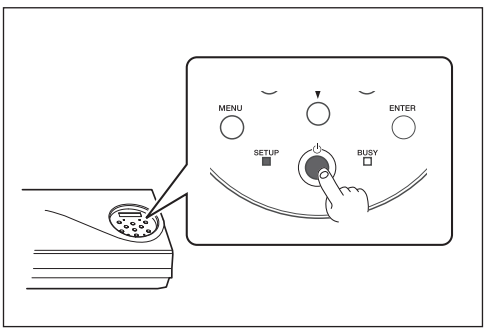

Switch off the sub power whenever output is finished.
Hold down the sub power button for one second or longer.

❷

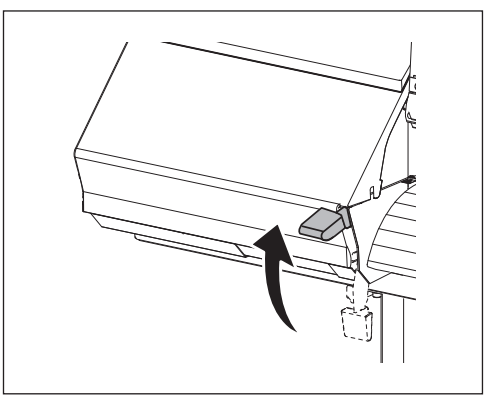

Raise the loading lever and remove the loaded media.
Raise the loading lever when the machine is not used even if the power is not turned off.

IMPORTANT!

Leave the main power switched on at all times.
Never switch off the main power. By switching on the main power, the automatic maintenance function is carried out periodically. If the automatic maintenance is not carried out, it may result in breakdown of this machine such as breakdown of the print heads.

Never switch off the main power or unplug the power cord suddenly while operation is in progress.
Switching off the main power or unplugging the power cord suddenly while operation in progress may damage the print head. Be sure to first switch off the sub power.
If the main power is accidentally switched off, immediately turn the power back on.

Chapter 3
Maintenance:
For always in the best condition

Checking for Remaining Ink and Replacing Cartridges 68
- Checking for Remaining Ink 68
- How to Replace Ink Cartridges 69

Maintenance that Should Be Performed Daily 70
- Disposing of Discharged Ink 70
- Cleaning 72
- About Care and Maintenance of Print Heads 73

When Normal Cleaning Is Not Effective 74
- Medium / Powerful Cleaning 74

When Uneven Color Issue Occurs 75
- Light Choke Cleaning 75

Maintenance that Should Be Performed More Than Once a Month ... 77
- When Manual-Cleaning Becomes Necessary 77
- Manual Cleaning 78

When Problems Such As Dot Drop-Out Are Not Cleared Up 83
- When Problems Such As Dot Drop-Out Are Not Cleared Up 83

Replacing Consumable Parts 86
- Replacing the Wiper 86
- Replacing the Felt Wiper 89
- Replacing the Blade 92
- Replacing the Separating Knife 94

When Not in Use for a Prolonged Period 96
- Keep Performing Maintenance 96
- Alarm Feature 96

Checking for Remaining Ink

Procedure

1. **Press (MENU).**

2.

Press (▲) several times until the screen shown on the left appears.
Press (►).

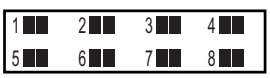

■ indicates the amount of ink remaining. When there are more ■, the amount of ink remaining is larger. (The display varies according to the number of ink cartridge slots in use.)

*** The display shows an approximate guide to the amount of remaining ink. It may differ somewhat from the actual amount remaining.**

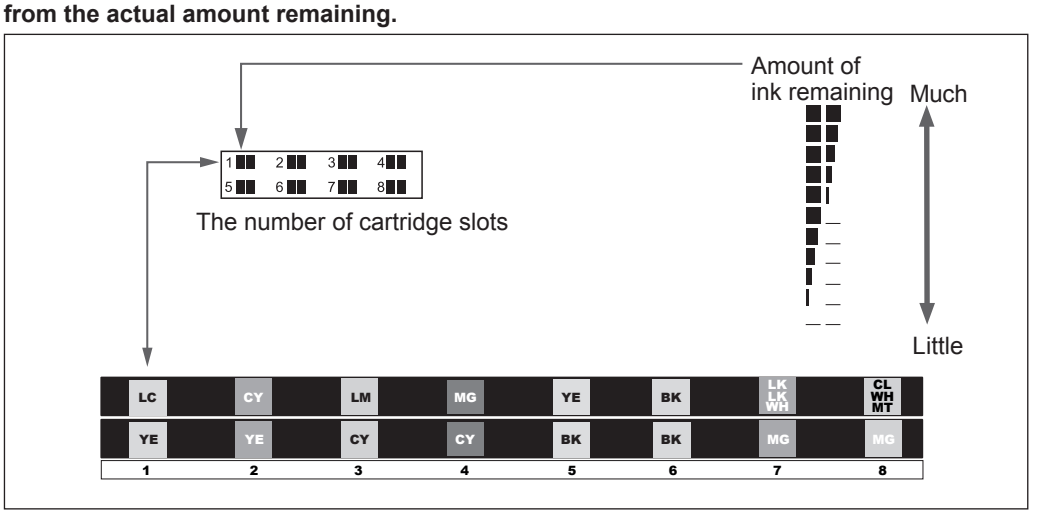

3. 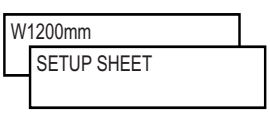

Press (MENU) to go back to the original screen.

How to Replace Ink Cartridges

When ink runs out, a warning beep sounds and printing pauses (unless the default settings have been changed). Pull out the empty cartridge and insert a new one. Printing resumes.

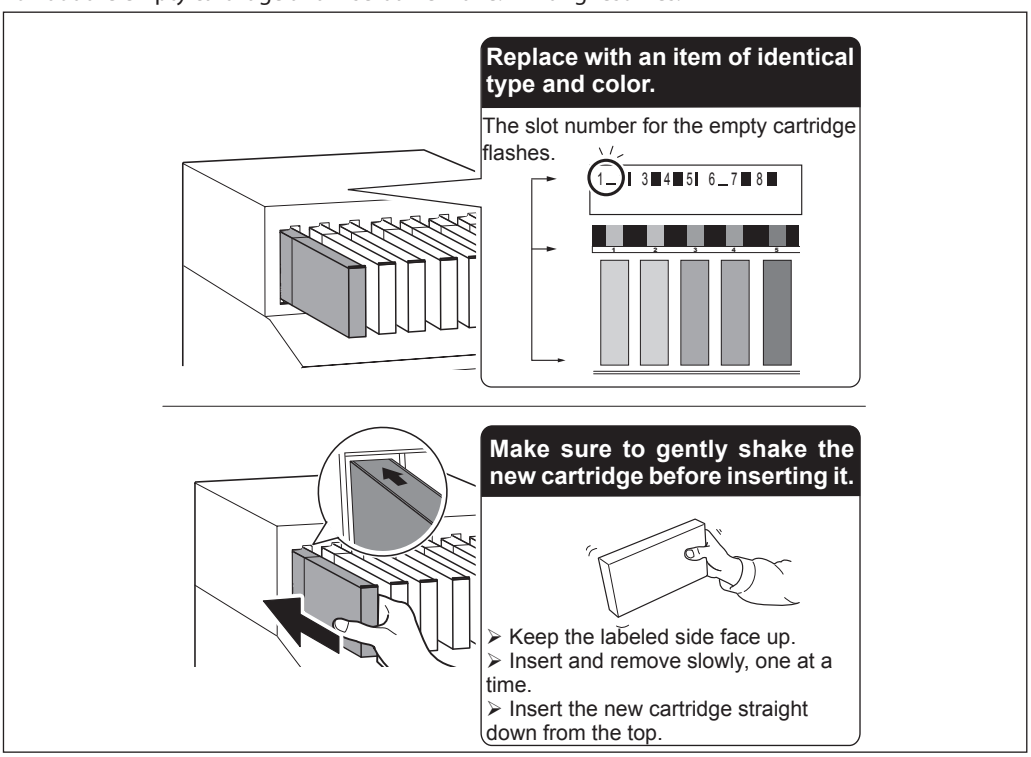

IMPORTANT! **Important Notes on Replacing Cartridges**

- ➢ Insert and remove slowly, one at a time.
- ➢ Never insert the cartridge askew by force. Insert it straight. Inserting the cartridge askew may cause ink leakage.
- ➢ Be sure to replace with an item of identical type.
- ➢ Never use an ink cartridge which has already been used in other machines even if it is of the identical type.
- ➢ Never mix items of different types.
- ➢ Never allow the machine to stand with an ink cartridge removed. The print heads may become clogged.
- ➢ Never insert or remove a partially used ink cartridge.
- ➢ Never remove an ink cartridge suddenly while the printer is in operation.

⚠WARNING **Never store ink, cleaning liquid, or discharged fluid in any of the following locations.**

- ➢ Any location exposed to open flame
- ➢ Any location where high temperature may occur
- ➢ Near bleach or any other such oxidizing agent or explosive material
- ➢ Any location within the reach of children

Fire may be a danger. Accidental ingestion by children may pose a health hazard.

Disposing of Discharged Ink

The drain bottle collects discharged fluid. Dispose of collected material before the bottle becomes full. The message shown in the figure appears when a certain amount of discharged fluid has collected in the bottle. Follow the procedure below to discard the discharged fluid.

Procedure

❶

When the screen shown on the left appears, detach the bottle, discard the discharged fluid to empty it.
After discarding the discharged fluid, you must promptly attach the drain bottle to the machine.

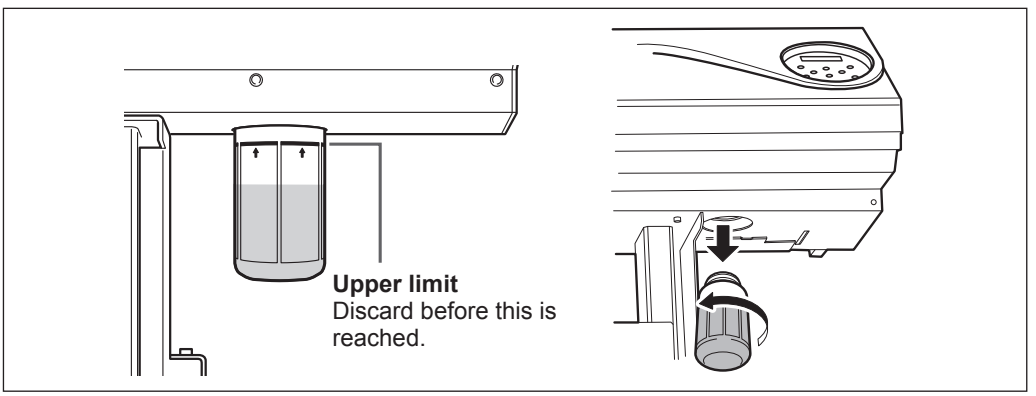

⚠CAUTION **Before you detach the drain bottle, be sure to wait for the screen to display "EMPTY DRAIN BOTTLE."**
After discarding the discharged fluid, promptly attach the drain bottle to the machine.
Failing to follow this procedure may cause discharged fluid to flow out of the tube and spill, soiling your hands or the floor.

❷ 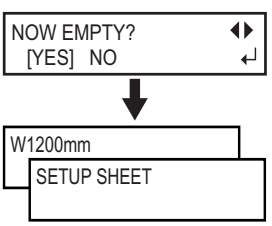

Press ENTER to display the left figure.
Use ◄ ► to select [YES].
Press ENTER .
The display go back to the original screen.

If you select [NO] without discarding discharged fluid:
This also allows you to go back to the original screen. The [EMPTY DRAIN BOTTLE] message disappears temporarily. When a certain amount of discharged fluid has collected in the bottle, the message appears again.

⚠CAUTION **When the [EMPTY DRAIN BOTTLE] message appears on the screen, discard discharged fluid as early as possible.**
Repeatedly selecting [NO] without discarding the discharged fluid may cause it to spill out of the drain bottle, soiling your hands or the floor.

When You Cannot Check Discharged Fluid Level in Drain Bottle

POINT!

Due to the characteristics of SOL INK, splashes inside the drain bottle surface may not allow you to easily check the amount of discharged fluid in the bottle. If the inner surface is not visible, clean the drain bottle in the following way when disposing of the discharged fluid.

- Clean the inside of the bottle using the included cleaning stick. (Cleaning sticks cannot be reused.)
- If the method described above does not work well, try the following method.

Procedure

1. **Detach the drain bottle to be cleaned from the machine, and attach the other drain bottle included as an accessory to the machine.**
2. **When discarding the discharged fluid of the removed drain bottle, let the fluid remain in the bottle by 2 to 3 cm from the bottom.**
3. **Firmly tighten the cap of the drain bottle.**
4. **Lay down the bottle and roll it so that all the inner surface is wet with the remaining discharged fluid.**
5. **Place the bottle upright and leave it as it is for 1 to 2 hours.**
6. **If the splashes still remain, repeat steps 4 and 5.**
7. **Dispose of the fluid.**

⚠WARNING **Never place discharged fluid and ink near open flame.**
Doing so may cause fire.

⚠CAUTION **To store discharged fluid temporarily, place it in the included drain bottle or in a durable sealed container such as a metal can or polyethylene tank, and cap tightly.**
Any spillage or vapor leakage make cause fire, odor, or physical distress.

Dispose of discharged fluid properly, in accordance with the laws in effect in your locale.
Discharged fluid is flammable and contains toxic ingredients. Never attempt to incinerate discharged fluid or discard it with ordinary trash. Also, do not dispose of it in sewer systems, rivers, or streams. Doing so may have an adverse impact on the environment.

Cleaning

⚠WARNING **Never use gasoline, alcohol, thinner, or any other flammable material.**
Doing so may cause fire.

⚠CAUTION **Before attempting cleaning, switch off the sub power and wait until the platen and dryer cool (approximately 30 minutes).**
Sudden movement of the machine may cause injury, or hot components may cause burns.

Wipe away any buildup of ink or grime on the media path and other locations as daily cleaning. In particular, the pinch rollers, grit rollers, and platen are likely to get a buildup of grime. Clean by wiping with a cloth moistened by neutral detergent diluted with water then wrung dry.

POINT!

- This machine is a precision device, and is sensitive to dust and dirt. Perform cleaning on a daily basis.
- Never attempt to oil or lubricate the machine.

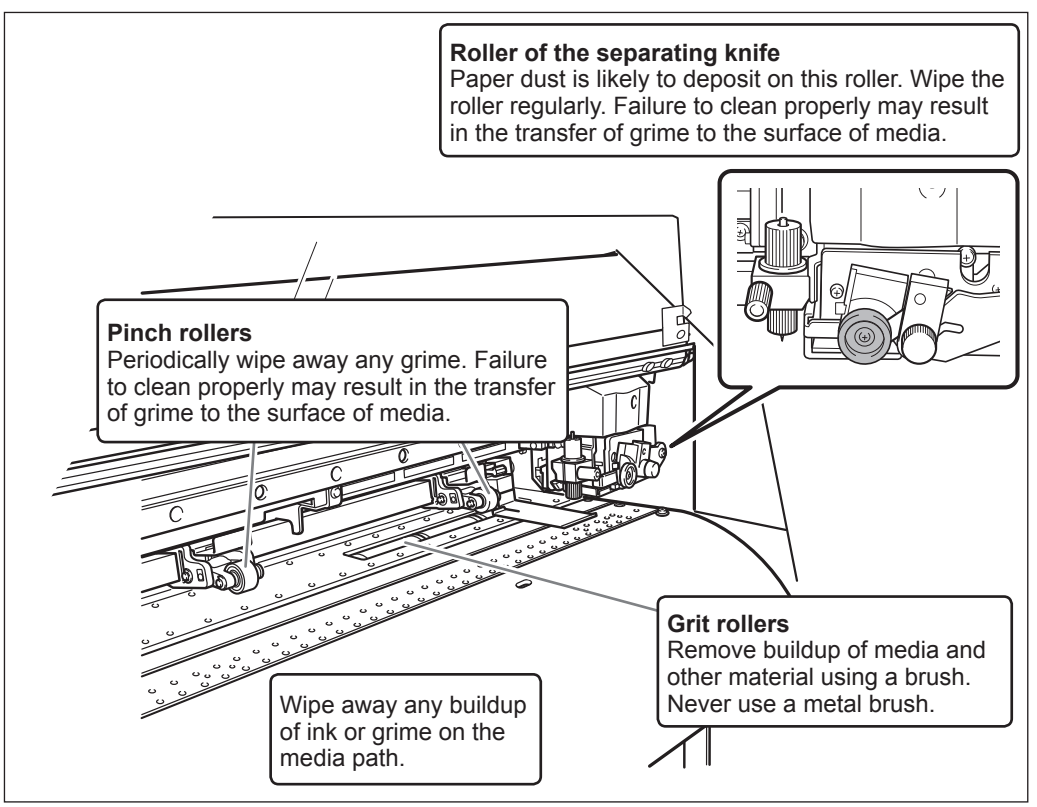

About Care and Maintenance of Print Heads

Care of the print heads is essential to ensuring optimal printing at all times. There are daily care and periodic care.

Daily Care and Maintenance

- **Printing tests and normal cleaning**
  It is recommended to perform the printing test and the normal cleaning before daily operation.
  ☞ P. 58, "Printing Tests and Cleaning"

Cleaning at Occurrence of Uneven Color Issue

- **Light Choke Cleaning**
  Perform this cleaning when color is uneven and unstable, i.e. darkness or brightness is different although the same data is printed with the same settings.
  ☞ P. 58, "Printing Tests and Cleaning"

Periodic Care and Maintenance

- **Medium cleaning/Powerful cleaning**
  Perform the medium cleaning or powerful cleaning when the problems such as dot drop-out are not cleared up by the normal cleaning.
  ☞ P. 74, "Medium / Powerful Cleaning"
- **Manual Cleaning**
  Based on your frequency of use, perform the manual cleaning periodically.
  ☞ P. 78, "Manual Cleaning"

* The print head is component that wears out. Periodic replacement is required, with the frequency of replacement depending on use. Purchase them from your authorized Roland DG Corp. dealer.

When Normal Cleaning Is Not Effective

Medium / Powerful Cleaning

When the problems such as dot drop-out are not cleared up by the "normal cleaning" (P. 58, "Printing Tests and Cleaning"), try the more forceful "medium cleaning." If the condition is not improved, try the even more forceful "powerful cleaning."

> **POINT!**
> Note, however, that the medium and powerful cleaning consumes more ink than normal cleaning, and too-frequent use may damage the print head itself. Avoid using it more than necessary.

Procedure

1. **Press FUNCTION.**

2.

Press ▼ several times until the screen shown on the left appears.
Press ►.

3. 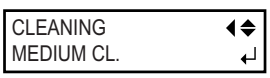

Press ▲ or ▼ and select "Medium."
When "Medium" is not effective, select "Powerful."
Press ENTER to enable the setting.

4. 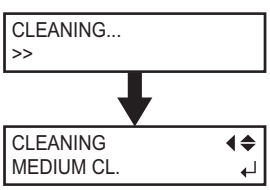

"Medium"
The screen shown in the figure appears and cleaning starts.
When it finishes, the screen shown in the figure appears again.

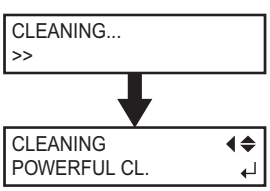

"Powerful"
The screen shown in the figure appears and cleaning starts.
When it finishes, the screen shown in the figure appears again.

5. 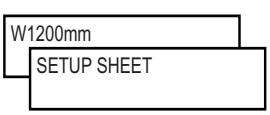

Press FUNCTION to go back to the original screen.

When powerful cleaning is not effective

When the problems such as dot drop-out are not cleared up even by performing powerful cleaning several times, perform "Manual Cleaning of Print Head." Such cleaning can be effective when carried out periodically, according to the frequency of use.

☞ P. 78, "Manual Cleaning"

When Uneven Color Issue Occurs

Light Choke Cleaning

POINT!

Light choke cleaning consumes a large quantity of ink. Frequently performing light choke cleaning makes the print heads more likely to be damaged. Avoid using it more than necessary.

Perform the light choke cleaning when color is uneven and unstable, i.e. darkness or brightness is different though the same data is printed with the same settings. To obtain stabilized output color, stir the ink.

Procedure

1. **Press MENU.**
2. MENU / SUB MENU — **Press ▼ several times until the screen shown on the left appears. Press ►.**
3. SUB MENU / INK CONTROL — **Press ▲ several times until the screen shown on the left appears. Press ►, and then ▲.**
4. INK CONTROL / LIGHT CHOKE CL. — **Press ENTER.**

When the [EMPTY DRAIN BOTTLE] message appears on the screen:

EMPTY / DRAIN BOTTLE

When the message shown in the figure appears, discard the discharged fluid. Attach the empty drain bottle to the machine again, and press ENTER to go to the next step.

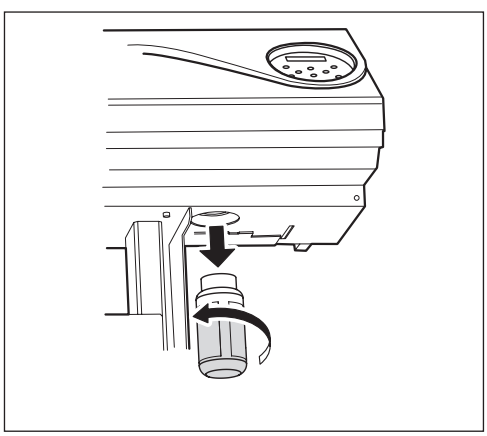

⚠CAUTION **Be sure to discard the discharged ink at this step.**
If you do not discard the discharged ink at this step, the discharged ink overflows from the drain bottle during the subsequent process.

⚠CAUTION **Before you detach the drain bottle, be sure to wait for the screen to display "EMPTY DRAIN BOTTLE."**
Failing to follow this procedure may cause discharged fluid to flow out of the tube and spill, soiling your hands or the floor.

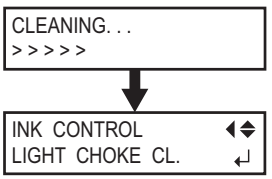

The screen shown in the figure appears.

When it finishes, the screen shown in the figure appears again.

IMPORTANT!

Never remove ink cartridges during cleaning.

If an ink cartridge is removed during cleaning, [CLEANING ERROR] appears on the display screen to disable the continuance of cleaning. In that case, refer to P. 161, "[CLEANING ERROR]" to recover from the error, and start from the beginning again.

5 **Press MENU ◄ in this order to go back to the original screen.**

If the output color is still unstable after the light choke cleaning, contact your authorized Roland DG Corp. dealer.

When Manual-Cleaning Becomes Necessary

Perform The Manual Cleaning More Than Once a Month.

To keep the stable output condition at all times, perform the manual cleaning more than once a month. The manual cleaning takes approximately 10 minutes.

The Manual Cleaning Is Recommended When the Following Symptoms Occur.

It is recommended to perform the manual cleaning when any of the symptoms given below occurs and it cannot be solved by the automatic cleaning functions such as the normal cleaning.
For your information, replacement of the wiper or felt wiper is also effective to improve the symptoms.

☞ P. 86, "Replacing the Wiper"
☞ P. 89, "Replacing the Felt Wiper"

Dot drop-out or deflection	Ink drips	Dragging dirt
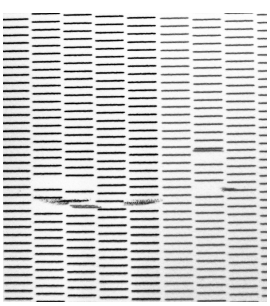	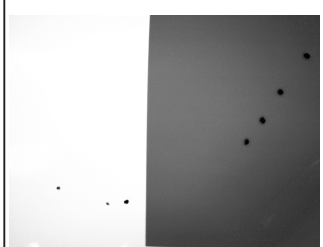	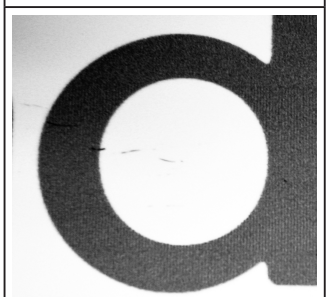
Flaws in the dot pattern are caused by dust on the print head.	Ink that has adhered to a dirty or dusty print head drips onto the media.	When dirt or dust accumulates on the print head it can interfere with image quality.

- When the cleaning stick and cleaning liquid for the manual cleaning runs out, place an order for them with your authorized Roland DG Corp. dealer.
- The print heads are components that wear out. Periodic replacement is required, with the frequency of replacement depending on use. Purchase them from your authorized Roland DG Corp. dealer.

Manual Cleaning

IMPORTANT!

Important Notes on This Procedure

- Before attempting this operation, remove any media.
- To prevent the heads from drying out, finish this procedure in 30 minutes or less. A warning beep sounds after 30 minutes.
- Never use any implement other than the included cleaning stick. Cotton swabs or other lint-producing items may damage the heads. If you use up the cleaning stick, purchase a new one from your authorized Roland DG Corp. dealer.
- Never immerse a cleaning stick that has already been used to perform cleaning in the cleaning liquid. Doing so may degrade the cleaning liquid.
- Do not put the cleaning stick used for cleaning into the cleaning liquid. It will deteriorate the fluid.
- Never rub the nozzle surface of the print heads.
- Stroke the sponges very gently, applying as little pressure as possible. Never rub, scrape, or crush them.

When a warning beep sounds during cleaning

A warning beep sounds in 30 minutes after the operation is started. At this time, stop work, and follow the procedure *4* P. 81, "Reattach cover L, cover R, and quit the manual cleaning menu." to attach cover L and cover R, then close the front cover. Press (ENTER) to quit the manual-cleaning menu. After that, restart the procedure from the beginning.

⚠CAUTION **Be sure to perform operations as specified by the instructions above, and never touch any area not specified in the instructions.**
Sudden movement of the machine may cause injury.

1. Enter the manual-cleaning menu.

1. **Remove any media.**
2. **Press (FUNCTION).**
3. FUNCTION / CLEANING — **Press (▼) several times until the screen shown on the left appears.**
   Press (►).
4. CLEANING / MANUAL CL. — **Press (▲) or (▼) and select "MANUAL CL."**
   Press (ENTER) to enable the setting.

❺ OPEN COVER L

When the screen shown on the left appears, open the cover L.
Pull the cover L toward you and remove it. Just raising the cover allows it to hit against the ink cartridges.

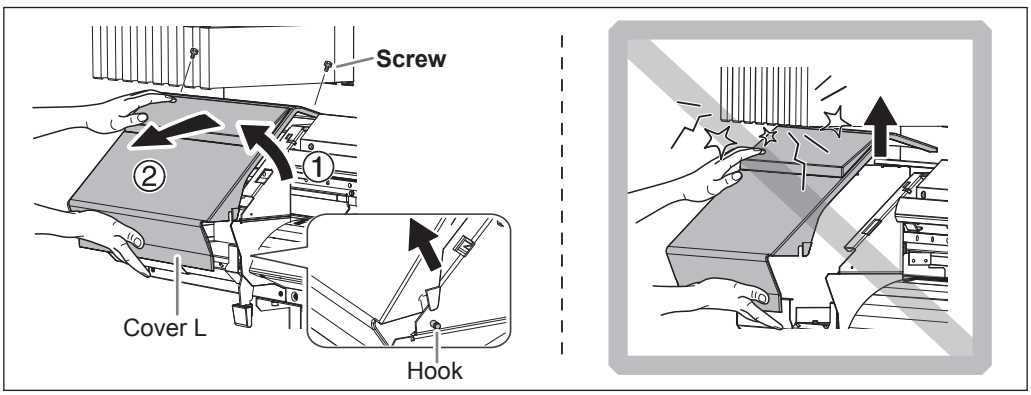

❻ REMOVE CUTTING RAIL ↵

Detach the cut rail.
Press (ENTER) **.**

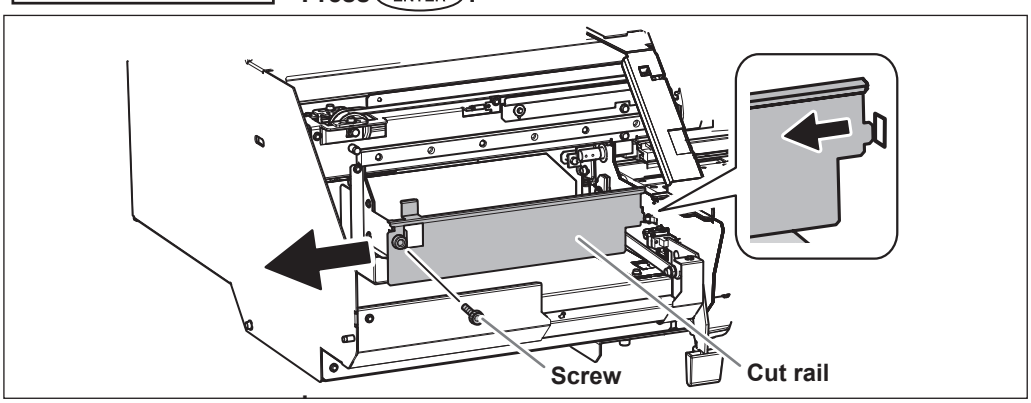

❼ CLOSE COVER L

Close the cover L.

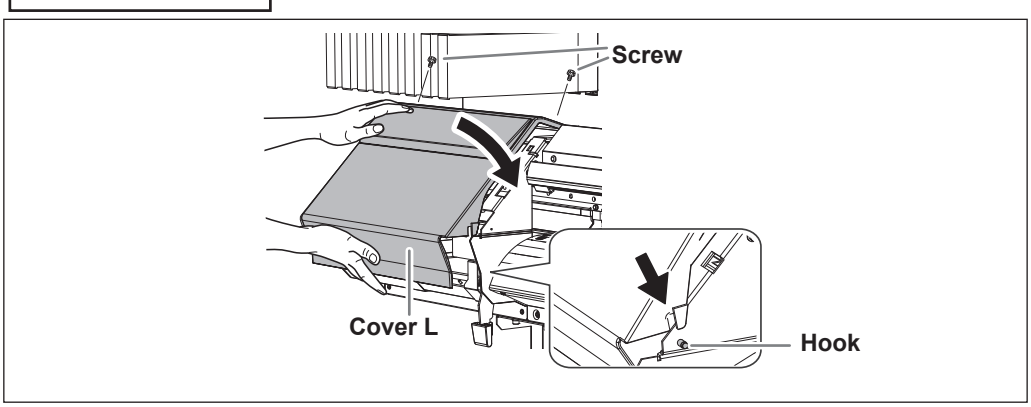

❽ CLOSE FRONT COVER

Close the front cover.
The print-head carriage moves to the left side of the machine, and then the screen shown in the figure appears.

❾ OPEN COVER L

Open the cover L.

FINISHED? ↵

Preparations are complete when this screen appears.

2. Remove cover R.

❶

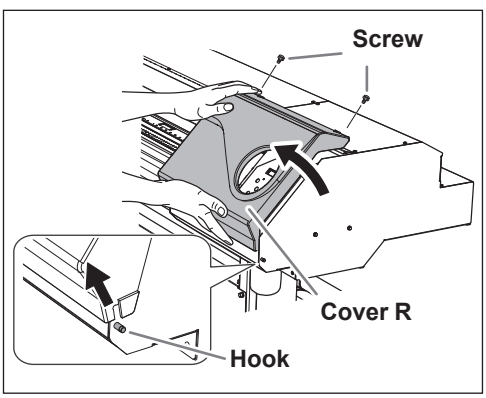

Remove the cover R.

❷

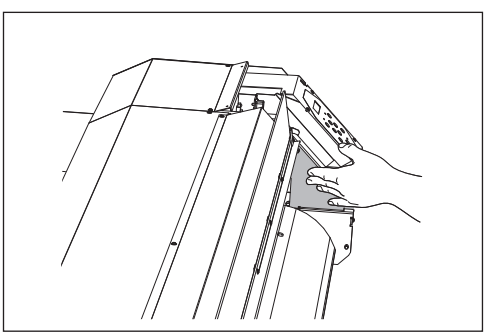

Touch the location shown in the figure to discharge any static electricity.

3. Clean using the cleaning stick.

❶

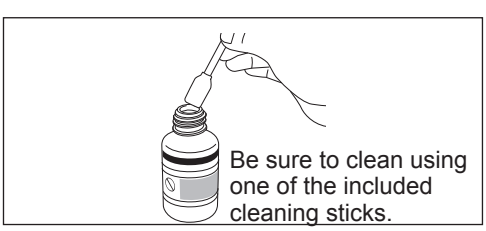

Moisten the cleaning stick with the cleaning liquid.

❷ **Check that the cut rail has been detached.**
If the cut rail is not detached, close all the covers and restart the operation from the beginning. If you continue the operation as the cut rail remains attached, the print heads might get broken.

❸ **Perform cleaning in the sequence shown in the figure below.**
Be especially careful to clean away any fibrous dust (lint).

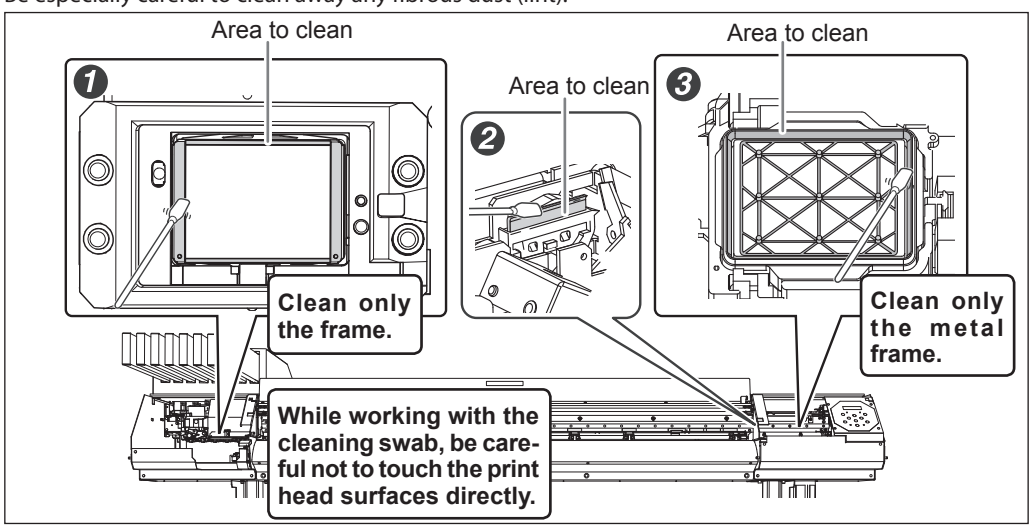

4. Reattach cover L, cover R, and quit the manual cleaning menu.

❶ **Attach the cover L.**

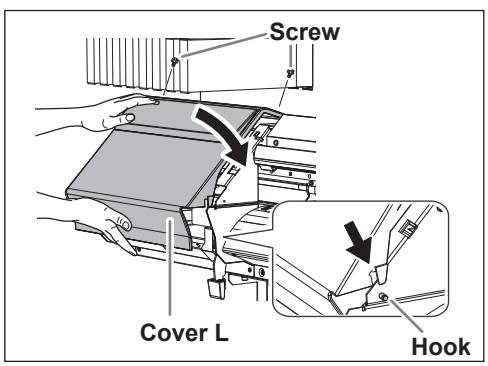

❷ **Attach the cover R.**

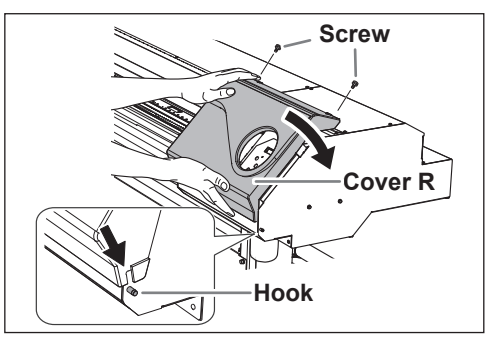

3 **Close the front cover.**

4 **Press (ENTER).**

5 OPEN COVER L

The print-head carriage moves to the right side of the machine, and then the screen shown in the figure appears.
Open the cover L.

6 REPLACE CUT
RAIL ↵

Attach the cut rail.
Press (ENTER).

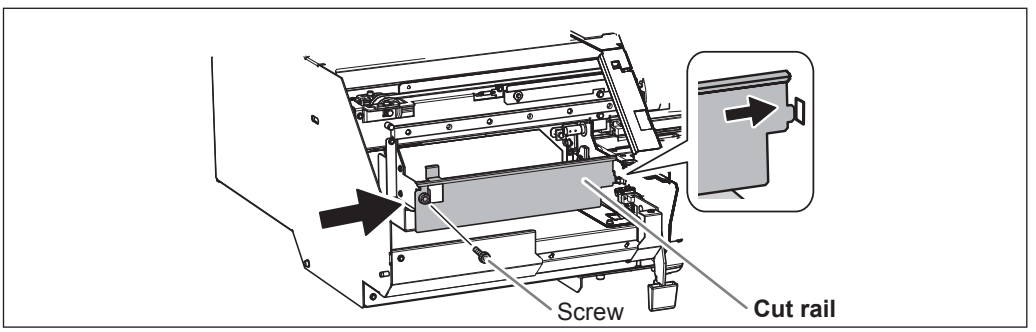

7 CLOSE COVER L

Attach the cover L.

CLEANING...
>>

MAINTENANCE ◀▲▼
CLEANING ↵

The screen shown in the figure appears and cleaning starts.
When it finishes, the screen shown in the figure appears again.

8 W1200mm
SETUP SHEET

Press (MENU) to go back to the original screen.

5. Perform a printing test to verify the results of the procedure.

Perform a printing test to check the results.

Perform cleaning using the machine's cleaning feature several times when necessary.

☞ P. 58, "Printing Tests and Cleaning"

When Problems Such As Dot Drop-Out Are Not Cleared Up

When Problems Such As Dot Drop-Out Are Not Cleared Up

When flaws in the dot pattern such as dot drop-out are not cleared up even after performing cleaning using the cleaning function (normal, medium, or powerful) or manual cleaning, perform the operation described below.

IMPORTANT!

A large amount of ink will be discharged during this operation. Perform this operation only when dot drop-out cannot be cleared up even after performing cleaning using the cleaning function (normal, medium, or powerful) or manual cleaning.

☞ P. 70, "Maintenance that Should Be Performed Daily"
☞ P. 74, "When Normal Cleaning Is Not Effective"
☞ P. 77, "Maintenance that Should Be Performed More Than Once a Month"

Procedure

1. **Press (MENU).**

2. MENU / SUB MENU — **Press (▼) several times until the screen shown on the left appears. Press (►).**

3. SUB MENU / INK CONTROL — **Press (▲) several times until the screen shown on the left appears. Press (►), and then (▲) twice.**

4. INK CONTROL / INK RENEWAL — **Press (ENTER).**

5. EMPTY / DRAIN BOTTLE — **When the screen shown on the left appears, detach the bottle, discard the discharged fluid in it, and make it empty.**

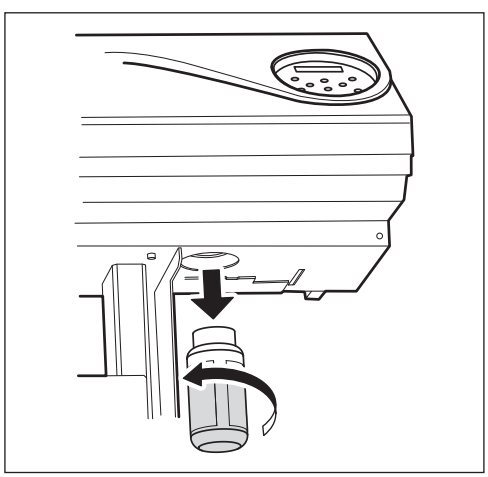

⚠CAUTION **Be sure to discard the discharged ink at this step.**
A large amount of ink will be discharged during this operation. Be sure to discard the discharged ink at this step. If you do not discard the discharged ink at this step, the discharged ink overflows from the drain bottle during the subsequent process.

⚠CAUTION **Before you detach the drain bottle, be sure to wait for the screen to display "EMPTY DRAIN BOTTLE."**
Failing to follow this procedure may cause discharged fluid to flow out of the tube and spill, soiling your hands or the floor.

6. EMPTY / DRAIN BOTTLE — **Attach the emptied drain bottle to the machine. Press (ENTER).**

The screen shown in the figure appears.

7

When the screen shown on the left appears, detach the bottle, discard the discharged fluid in it, and make it empty.

⚠CAUTION

Be sure to discard the discharged ink at this step.
A large amount of ink will be discharged during this operation. Be sure to discard the discharged ink at this step. If you do not discard the discharged ink at this step, the discharged ink overflows from the drain bottle during the subsequent process.

⚠CAUTION

Before you detach the drain bottle, be sure to wait for the screen to display "EMPTY DRAIN BOTTLE."
Failing to follow this procedure may cause discharged fluid to flow out of the tube and spill, soiling your hands or the floor.

8

Attach the emptied drain bottle to the machine.
Press ENTER.

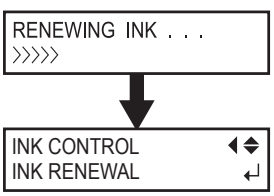

The screen shown in the figure appears.

When it finishes, the screen shown in the figure appears again.

9 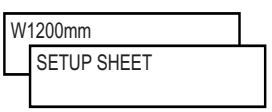

Press MENU to return to the original screen.

About [Ink Circulation] Menu

[Ink Circulation] is the menu displayed only when the ink mode is in W, MT, or WMT. Use this menu only at the time of transfer. For more information on the operation at the time of transfer, refer to the "Setup Guide."

☞ "Setup Guide"

POINT! Cleaning of the head surface as an emergency measure

When dot drop-out and/or dot deflection is not improved even if cleaning is performed several times, you can clean the head surface as an emergency measure. Since the head surface (nozzle surface) has an extremely delicate mechanism, make sure to perform the operation carefully and deliberately. Note that this operation is an emergency measure. It may damage defect-free parts depending on the symptom, deteriorating it. If you have any questions, contact your authorized Roland DG Corp. dealer or Roland DG Corp.

Procedure

1. **Moisten the cleaning stick with the cleaning liquid.**
2. **Softly press the cleaning stick to the head surface (nozzle surface).**
   Press it gently and softly so that the head nozzle is permeated with the cleaning liquid. Never rub the stick on the surface and press it forcibly.

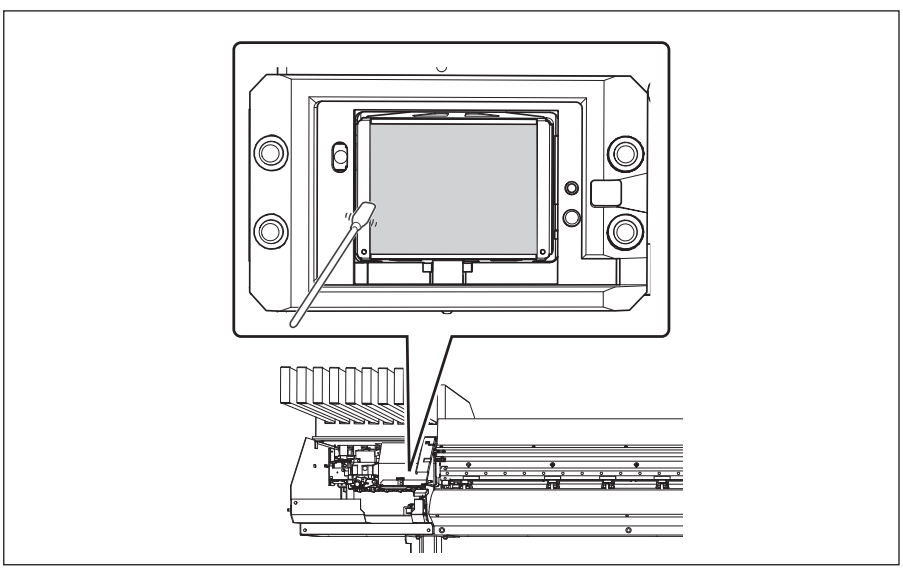

Replacing the Wiper

The wipers are components that you use when cleaning the print heads. When the screen displays a message like the one shown, it means the item needs to be replaced. Replace with new items.

TIME FOR WIPER REPLACE ↵

Regarding the purchase of the wiper, contact your authorized Roland DG Corp. dealer or Roland DG Corp.

⚠CAUTION **Be sure to perform operations as specified by the following instructions, and never touch any area not specified in the instructions.**
Sudden movement of the machine may cause injury.

1. Display the [REPLACE WIPER] menu.

❶ | TIME FOR
WIPER REPLACE ↵ | **When the message shown in the figure appears, press ENTER.**

❷ **Remove any media from the platen.**

❸ **Press MENU.**

❹ | MENU ◀▲▼
SUB MENU ▶ | **Press ▼ several times until the screen shown on the left appears.**
Press ►, and then ▲ twice.

❺ | SUB MENU ◀▲▼
MAINTENANCE ▶ | **Press ►.**

❻ | MAINTENANCE ◀▲▼
REPLACE WIPER ↵ | **Press ENTER.**
The print-head carriage moves to a location where wiper replacement is possible, and then the screen shown in the figure appears.

OPEN COVER R

❼ 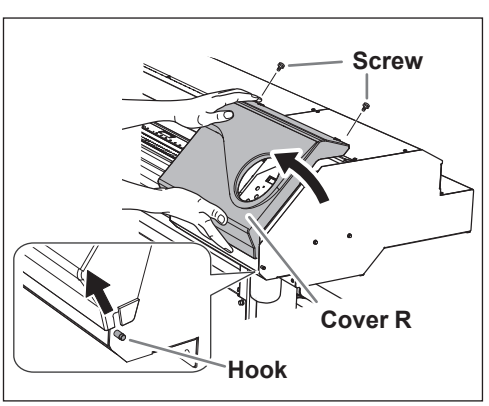

Remove the cover R.

❽

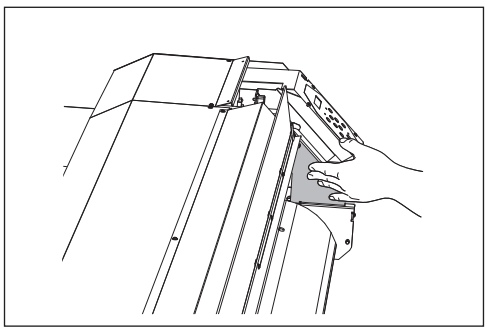

Touch the location shown in the figure to discharge any static electricity.

❾

FINISHED?
↵

Preparations are complete when this screen appears.

2. Replace the wiper.

❶ **Detach the old wiper.**

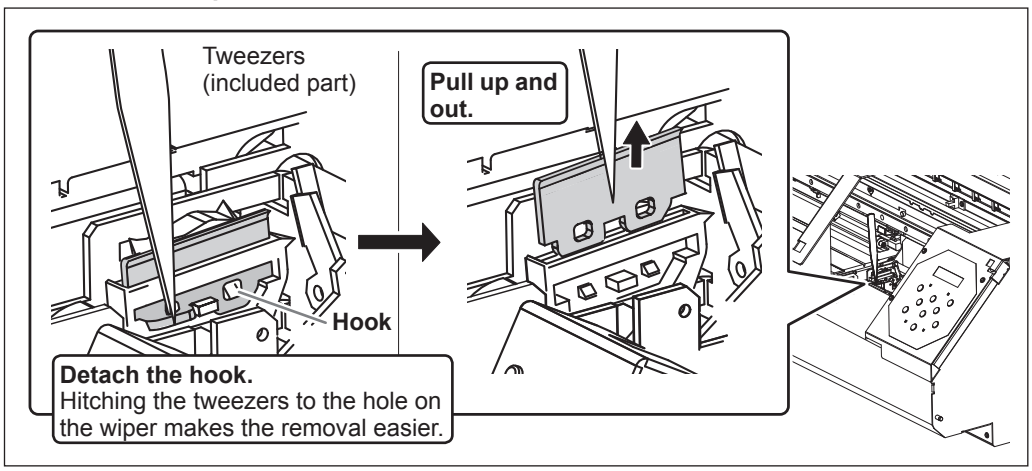

❷ **Insert the new wiper.**

Place the inclined end on the back side If the wiper is placed inversely, the proper cleaning becomes impossible.

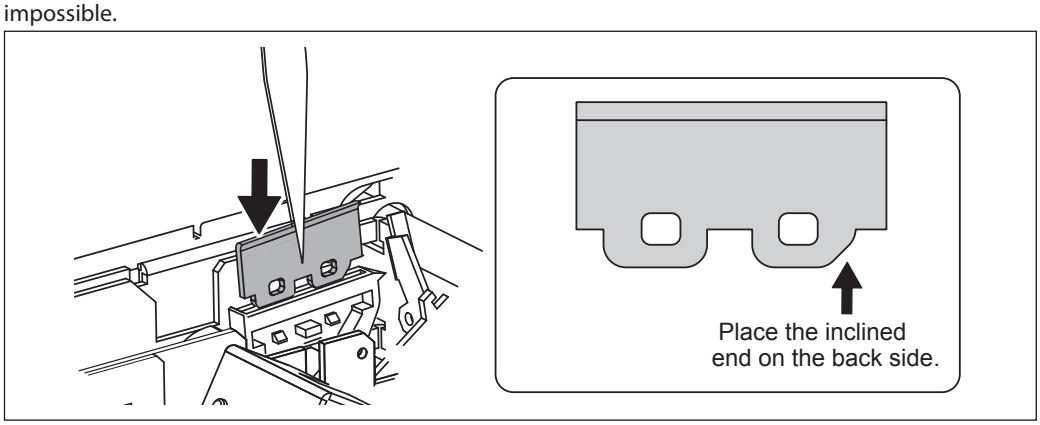

❸

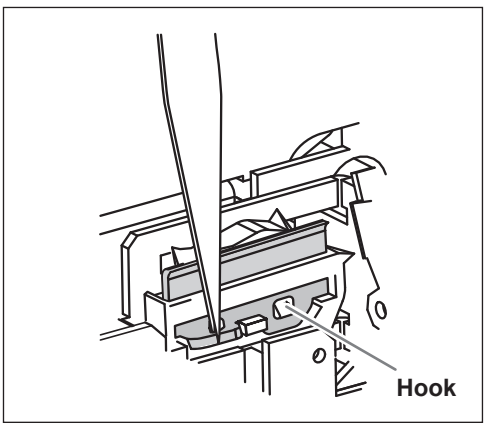

Attach the hook.

Make sure to attach the hook. Otherwise it cases dot-drop out or else.

3. Reattach the cover R, and quit the wiper replacement menu.

❶

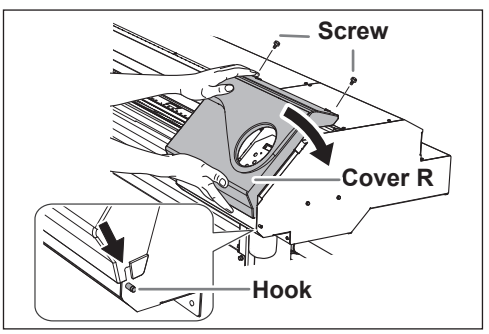

Attach the cover R.

❷ **Press (ENTER).**

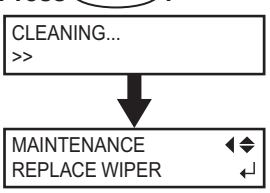

After the process to quit the wiper replacement menu, the screen shown in the figure appears.

❸

Press (MENU) to go back to the original screen.

4. Perform a printing test to verify the results of the procedure.

Perform a printing test to check the result.

☞ P. 58, "Printing Tests and Cleaning"

Replacing the Felt Wiper

The felt wiper is the part used for cleaning of the print heads. When such the screen is displayed on the display screen, it is the time for replacement. Replace it with a new item.

TIME FOR FELT REPLACE ↵

Regarding the purchase of the felt wiper, contact your authorized Roland DG Corp. dealer or Roland DG Corp.

⚠CAUTION **Be sure to perform operations as specified by the following instructions, and never touch any area not specified in the instructions.**
Sudden movement of the machine may cause injury.

1. Enter the felt wiper replacement menu.

❶ TIME FOR / FELT REPLACE ↵

When the message shown in the figure appears, press ENTER.

❷ **Remove any media.**

❸ **Press MENU.**

❹ MENU ◀▲▼ / SUB MENU ▶

Press ▼ several times until the screen shown on the left appears.
Press ▶, and then ▲ twice.

❺ SUB MENU ◀▲▼ / MAINTENANCE ▶

Press ▶, and then ▼ twice.

❻ MAINTENANCE ◀▲▼ / REPLACE FELT ↵ → OPEN COVER R

Press ENTER.
The print-head carriage moves to a location where felt wiper replacement is possible, and then the screen shown in the figure appears.

❼

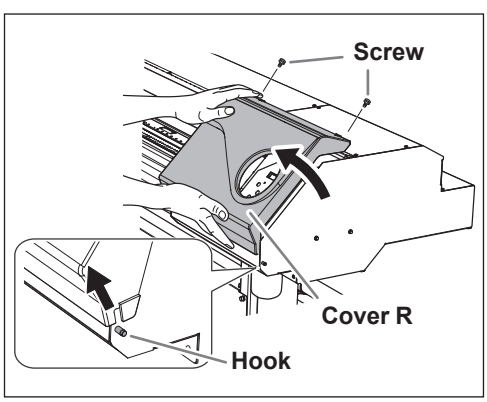

Remove the cover R.

❽

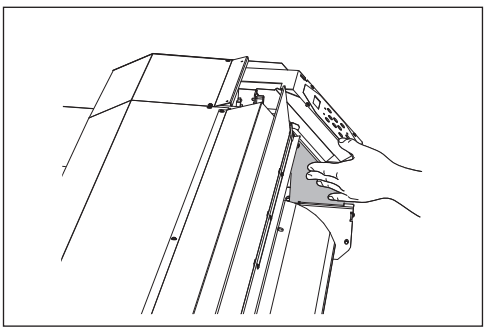

Touch the location shown in the figure to discharge any static electricity.

❾

FINISHED?
↵

Preparations are complete when this screen appears.

2. Replace the felt wiper.

❶ **Detach the old felt wiper.**

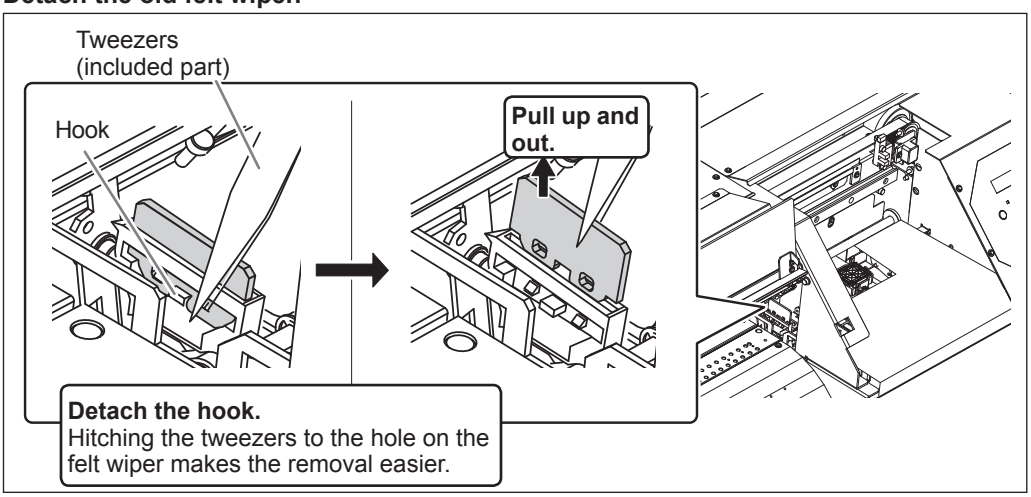

❷

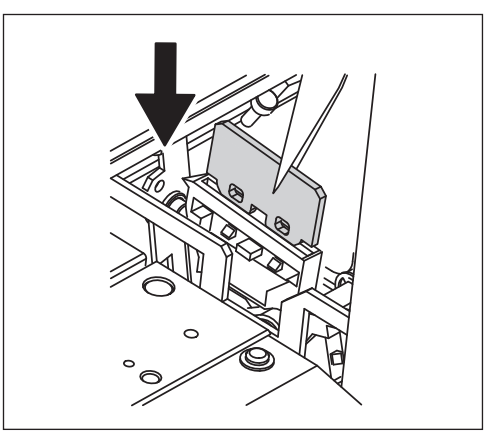

Insert the new felt wiper.

❸

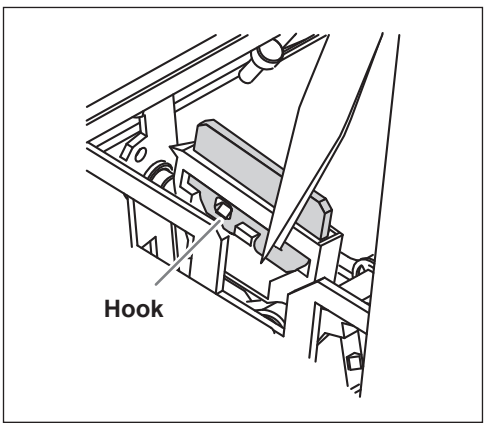

Attach the Hook.

Make sure to attach the hook. Otherwise it cases dot-drop out or else.

3. Reattach the cover R, and quit the felt wiper replacement menu.

❶

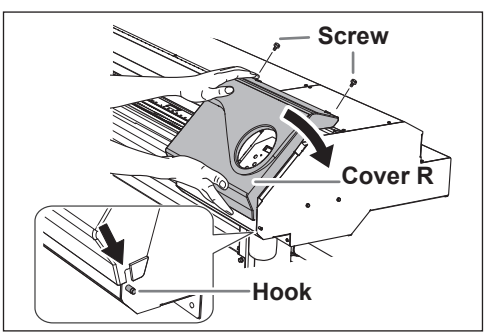

Attach the cover R.

❷ **Press** (ENTER).

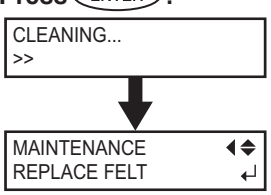

After the process to quit the felt wiper replacement menu, the screen shown in the figure appears.

❸

Press (MENU) to go back to the original screen.

4. Perform a printing test to check the result.

Perform a printing test to check the result.

☞ P. 58, "Printing Tests and Cleaning"

Replacing the Blade

If the blade becomes dull, or if the edge of the blade is chipped, or if the blade quality is lowered, replace it with a new blade.

⚠CAUTION **Be sure to perform operations as specified by the following instructions, and never touch any area not specified in the instructions.**
Sudden movement of the machine may cause injury.

⚠CAUTION **Never touch the tip of the blade with your fingers.**
Doing so may result in injury.

1. Enter the blade replacement menu.

❶ **Press (MENU).**

❷
```
MENU
SUB MENU
```
Press (▼) several times until the screen shown on the left appears.
Press (►), and then (▲) twice.

❸
```
SUB MENU
MAINTENANCE
```
Press (►).

❹
```
MAINTENANCE
REPLACE KNIFE
```
Press (▼) several times until the screen shown on the left appears.
Press (ENTER).

❺
```
NOW PROCESSING..
```
↓
```
OPEN FRONT
COVER
```
The cutting carriage moves to a location permitting blade replacement, and then the screen shown in the figure appears.

❻
```
FINISHED?
```
Open the front cover.
Preparations are complete when this screen appears.

2. Replace the blade.

❶ 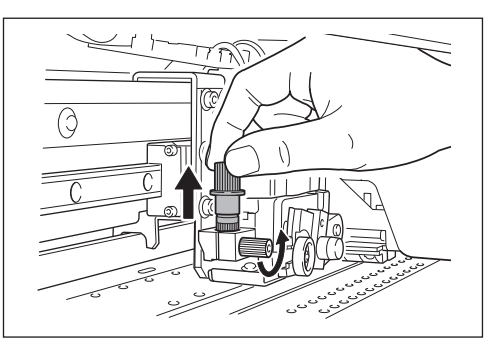

Remove the blade holder.

❷ **Replace the blade.**

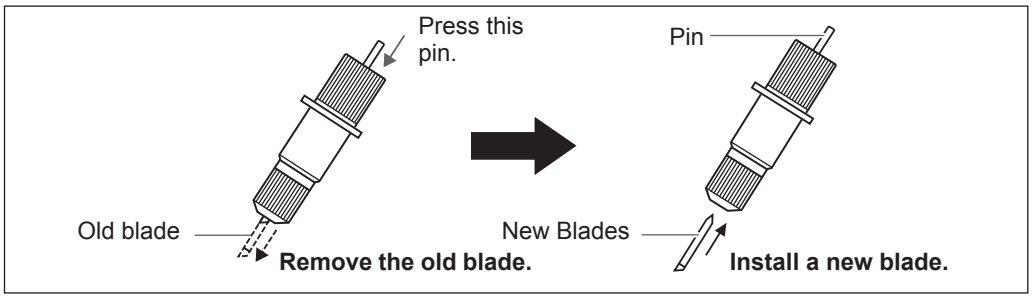

❸

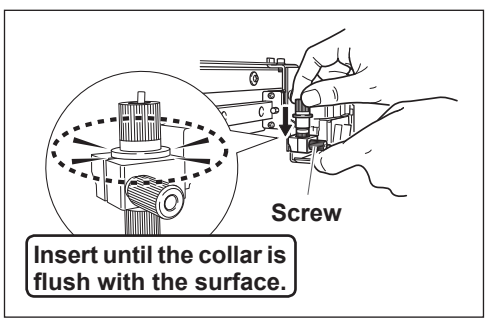

Support the screw from below and insert the blade holder.
If installed without supporting the screw in this way, cutting quality may become poor.

❹

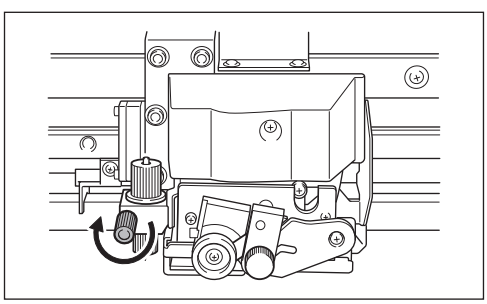

Tighten the screw.
Tug the blade holder upward to make sure it does not come loose.

3. Quit the blade replacement menu.

❶ **Close the front cover.**
Press ENTER .

❷

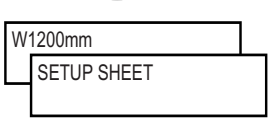

Press MENU to go back to the original screen.

4. Adjusting the cutting conditions and cutting-in amount.

☞ P. 116, "Fine-Tuning the Cutting Conditions"
☞ P. 118, "Accurately Adjusting the Cutting-in Amount"

Replacing the Separating Knife

If the separating knife becomes dull, replace it with the included replacement knife.

⚠CAUTION **Be sure to perform operations as specified by the following instructions, and never touch any area not specified in the instructions.**
Sudden movement of the machine may cause injury.

⚠CAUTION **Never touch the tip of the blade with your fingers.**
Doing so may result in injury.

1. Enter the blade replacement menu.

1. **Remove any media.**
2. **Press (MENU).**
3. MENU ◀▲▼ / SUB MENU ▶ — **Press (▼) several times until the screen shown on the left appears. Press (►), and then (▲) twice.**
4. SUB MENU ◀▲▼ / MAINTENANCE ▶ — **Press (►).**
5. MAINTENANCE ◀▲▼ / REPLACE KNIFE ↵ — **Press (▼) several times until the screen shown on the left appears. Press (ENTER).**

   NOW PROCESSING.. → OPEN FRONT COVER — The cutting carriage moves to a location where blade replacement possible, and then the screen shown in the figure appears.
6. FINISHED? ↵ — **Open the front cover.**
   Preparations are complete when this screen appears.

2. Replace the separating knife.

1. 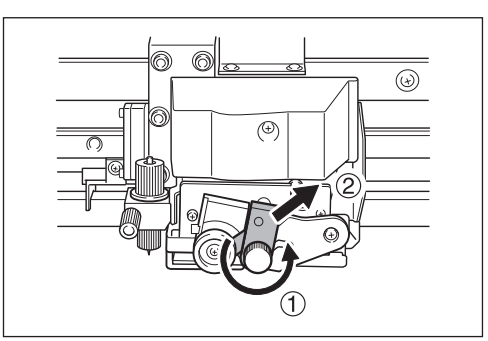

Remove the separating knife.
① Loosen the screw until it slips out.
② Grasp the screw portion, and slowly pull it out in the direction of the arrow. When doing this, do not pull it back toward you.

❷

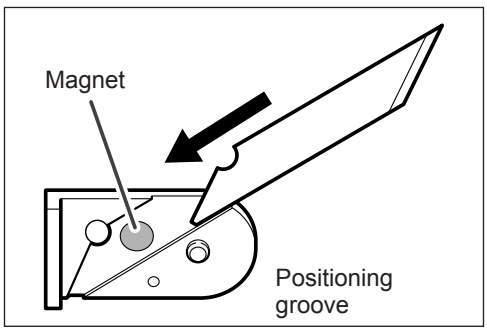

Install a new knife.
The knife is secured in place by the magnet.

❸

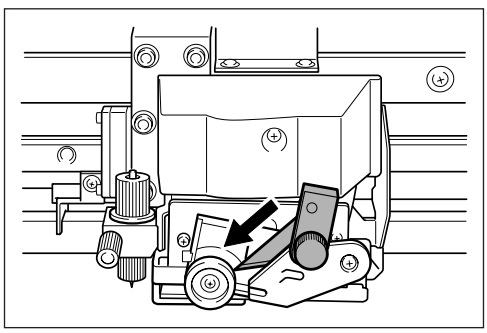

Slowly insert it into the groove.

❹

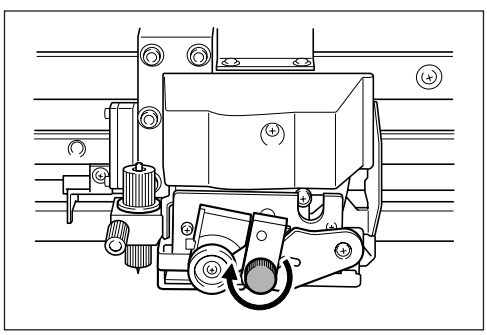

Tighten the screw.
Take care to ensure that the knife does not slip out of position at this time.

3. Quit the blade replacement menu.

❶ **Close the front cover.**
Press (ENTER).

❷

Press (MENU) to go back to the original screen.

When Not in Use for a Prolonged Period

Keep Performing Maintenance

Switch on the power once a month

Switch on the sub power once a month. When you turn on the power, the machine automatically performs some operations such as those to keep the print heads from drying out. Allowing the machine to stand completely unused for a prolonged period may damage the print heads, so be sure to switch on the power to perform these automatic operations.

Keep at a constant temperature and relative humidity

Even when the machine is not in use, keep it at a temperature of 5 to 40°C (41 to 104°F) and a relative humidity of 20 to 80% (with no condensation). Temperatures that are too high may degrade the ink and cause malfunction. Temperatures that are too low may cause the ink to freeze and damage the heads.

Alarm Feature

This feature is to remind you to switch on the sub power once a month. When the machine remains unused for about one month, this screen appears and a warning beep sounds. If this screen appears, switch on the sub power. When maintenance operations finish, switch off the sub power.
This feature operates when the printer's main power is turned on. Be sure to always switch on the printer's main power even if the printer is not used for a prolonged period.

Chapter 4
Part of Practice

Fully Utilizing Preset Function....98
- Saving Various Settings as a Name Assigned Preset....98
- Loading a Saved Preset....100

Fully Utilize the Media Heating System....101
- What Is the Media Heating System?....101
- Making the Temperature Setting for the Media Heating System....101
- Control of Media Heating System During Preheating....103
- Drying the Trailing Edge of the Printing Area on the Dryer....104
- Setting the Drying Time After Printing....104
- Using an Optional Dryer....105

Fully Utilizing the Correction Function....106
- Correcting for Misalignment in Bidirectional Printing....106
- Correcting for Misalignment in Bidirectional Printing More Precisely....107
- Alleviating Horizontal Bands and the Like (Feed Correction Function)....107

Accommodating to the Types and Condition of Media....109
- Adjusting Head Height to Match Media Thickness....109
- Using Transparent Media....110
- Printing Hard-to-Dry Media....110
- Using the Media Easy to Be Winkled/Hard to Be Fed....111
- Speeding Up Output for Narrow Media....112
- Preventing Soiling of the Media and Dot Drop-Out....113
- Using Sticky Media....114

Fully Utilizing Cutting Function....115
- Hints and Tips for Cutting Setting....115
- Preventing Pulling of the Media with Undue Force When Performing Cutting Only....115
- Fine-Tuning the Cutting Conditions....116
- Accurately Adjusting the Cutting-in Amount....118
- Performing Distance Correction During Cutting....119
- Correcting Misalignment of the Printing and Cutting Positions....120
- Prioritize the Cuttings Setting of This Machine to the Settings of a Computer Side in RIP Software....122
- Viewing the Automatic Environment Correction Function Settings....123
- Correcting Misalignment of the Printing and Cutting Positions During Cutting....123

Performing Printing and Cutting Separately....126
- To Perform Printing and Cutting Separately....126
- Printing with Crop Marks....126
- Aligning Automatically and Cutting....128
- Aligning Manually and Cutting....130
- Correcting Misalignment for Printing and Cutting When Using Crop Marks....131

Using Media Take-Up System....134
- Use the Media Take-Up System When the Output Accompanied with the Pull-Back Operation Is Performed....134
- Use Conditions of Take-Up System When “TU2” Is Selected....134

Fully Utilizing Preset Function

Saving Various Settings as a Name Assigned Preset

Procedure

1. **Press MENU.**

2.

Press ▼ to display the left figure.
Press ►, and then ▼.

3. 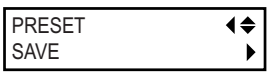

Press ►.

4. 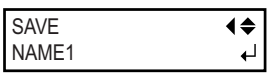

Press ▲ ▼ to select one of NAME1 through 8.
Press ENTER to enable the setting.
The present menu settings are saved.

5. 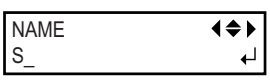

Press ▲ ▼ to enter a character.
When a character is decided, press ►.
The characters you can enter are "A" through "Z," "0" through "9," and the "-" character. You can enter up to 15 characters, including spaces.

6. 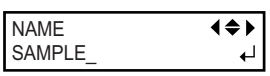

Press ▲ ▼ to enter a character.
Enter the following characters in the same way.
When entries are completed, press ENTER to enable the setting.

7. 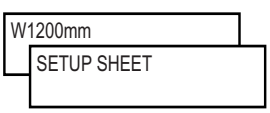

Press MENU to go back to the original screen.

Description

Using the [PRESET] menu lets you easily change a wide variety of settings to optimize them for the media. Up to eight types of presets can be saved. You can assign a name to each one. Using media names for these may aid recognition and clarity. Making changes for each menu item every time you change the media can be troublesome. That's why it can be useful to save the menu-item settings optimized for an often-used type of media as a preset. The next time you use the media, you can change the menu-item settings to the optimal values for the media simply by loading the preset you saved. Menu items that can be saved in presets are listed below.

[PRINT] (Print heater), [DRYER]	☞ P. 101, "Making the Temperature Setting for the Media Heating System"
[PREHEATING]	☞ P. 103, "Control of Media Heating System During Preheating"
[DRYING TIME]	☞ P. 104, "Setting the Drying Time After Printing"
[FEED FOR DRY]	☞ P. 104, "Drying the Trailing Edge of the Printing Area on the Dryer"
[ADJUST BI-DIR SIMPLE SETTING]	☞ P. 106, "Correcting for Misalignment in Bidirectional Printing"
[ADJUST BI-DIR DETAIL SETTING]	☞ P. 107, "Correcting for Misalignment in Bidirectional Printing More Precisely"
[CALIBRATION]	☞ P. 107, "Alleviating Horizontal Bands and the Like (Feed Correction Function)"
[EDGE DETECTION]	☞ P. 110, "Using Transparent Media"
[SCAN INTERVAL]	☞ P. 110, "Printing Hard-to-Dry Media"
[VACUUM POWER]	☞ P. 111, "Using the Media Easy to Be Winkled/Hard to Be Fed"
[FULL WIDTH S]	☞ P. 112, "Speeding Up Output for Narrow Media"
[MEDIA RELEASE]	☞ P. 114, "Using Sticky Media"
[FORCE], [SPEED], [OFFSET], [UP-SPEED]	☞ P. 116, "Fine-Tuning the Cutting Conditions"
[CALIBRATION] (in the [CUTTING MENU])	☞ P. 119, "Performing Distance Correction During Cutting"
[PRINT-CUT ADJ.]	☞ P. 120, "Correcting Misalignment of the Printing and Cutting Positions"
[CROP-CUT ADJ.]	☞ P. 131, "Correcting Misalignment for Printing and Cutting When Using Crop Marks"

☞ P. 100, "Loading a Saved Preset"

Loading a Saved Preset

Procedure

1. **Press (MENU).**

2. MENU ◀▲▼ / PRESET ▶

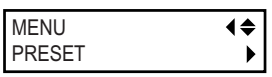

   Press (▼) to display the left figure.
   Press (►) twice.

3. LOAD ◀▲▼ / NAME1 ↵

   SETUP SHEET

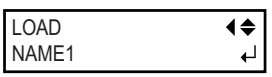

   Press (▲) (▼) to select a name to be called.
   Press (ENTER) to enable the setting.

   The settings are changed and the screen shown in the figure appears.

Description

This loads a saved preset. You can select any one of eight types of presets (When no names have been assigned, you select from among NAME1 through NAME8). If you call a preset while [SETUP] stays illuminated, [SETUP] starts flashing. When the setup operation is completed, [SETUP] is illuminated again.

Fully Utilize the Media Heating System

What Is the Media Heating System?

This machine is equipped with a media heating system that warms the media. You use this mainly to improve ink adhesion and also dry the ink. You can adjust the temperature settings to match the type of media and the printing speed.

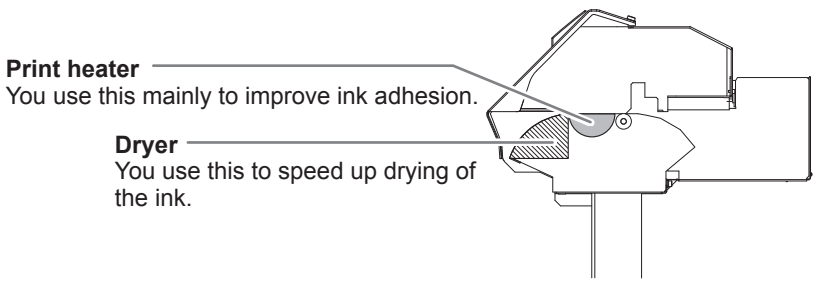

* By using an optional dryer, you can speed up drying of the ink more. Contact your sales dealer or Roland DG Corporation for recommended dryer models.
☞ P. 105, "Using an Optional Dryer"

⚠WARNING **CAUTION: high temperatures**
The platen and dryer become hot. Exercise caution to avoid fire or burns.

⚠WARNING **Remove any loaded media or switch off the sub power when printing is not being performed.**
The continued application of heat at a single location may cause fire or produce toxic gases.

⚠WARNING **Never use media that cannot withstand the heat.**
Doing so may result in fire or the release of toxic gases, or may degrade the media.

⚠WARNING **Never use the platen or dryer for any purpose for which they are not intended, such as to dry clothing.**
Doing so may cause overheating, resulting in fire or accident.

Use at an ambient temperature of 20 to 32°C (68 to 90°F).

If the machine is used at an ambient temperature lower than 20°C (68°F), then depending on the type or width of the media, wrinkling or temperature-caused unevenness may occur. If this happens, try lowering the temperature of the media heating system by about 2°C. To obtain stable printing results, however, the machine should be used at an ambient temperature of 20 to 32°C (68 to 90°F).

Making the Temperature Setting for the Media Heating System

Procedure

1. **Press (FUNCTION).**
2. FUNCTION ◀◆
   HEATER CONFIG ▶

   Press (▼) several times until the screen shown on the left appears.
   Press (►).

❸

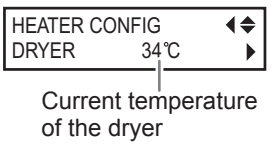

Press ▲ ▼ to select [PRINT] (print heater) or [DRYER]
Press ►.

❹

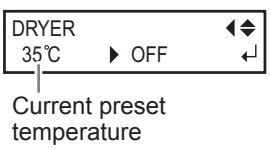

Press ▲ ▼ to select a temperature.
You can set to "OFF." When set to "OFF," the media heating system does not operate at all.
Press ENTER to enable the setting.

POINT! PRINT HEATER: General Guide for Setting Temperature

You use this mainly to improve ink adhesion and inhibit smudging.
If the ink forms lumps or smudges, raise the temperature. Note, however, that a temperature that is too high may degrade the media or cause it to wrinkle.

POINT! DRYER: General Guide for Setting Temperature

When ink drying is poor, raise the temperature. Note, however, that a temperature that is too high may degrade the media or cause it to wrinkle.

❺

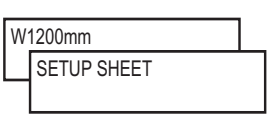

Press FUNCTION to go back to the original screen.

Description

By default setting, simply switching on the power does not make the media heating system warm up to the preset temperature. The temperature rises until preset temperature when the media is loaded correctly and SETUP lights up. You can also make this setting on the software RIP. When you have made the setting on the software, the software's setting is used.

* Depending on the usage environment, the temperature of the print heater or dryer may become higher than the preset temperature, but this does not represent a problem.

POINT! Hints and Tips for Temperature Setting

The relationship between the print mode and temperature

The optimal temperature for the media heating system varies according to such factors as the type of media and differences in the print mode. If smudging or poor drying occur even after raising the temperature, try using a print mode of RIP software offering higher image quality. Conversely, when you want to use a faster print mode, raise the temperature.

Amount of ink

When you change the amount of ink using the settings for your software RIP, adjusting this may yield better results. If problems such as smudging persist even after raising the temperature, try reducing the amount of ink.

Other points to remember

When recommended settings for temperature, print mode, and other values are given as the use condition of your media, use the suggested settings.

Control of Media Heating System During Preheating

Note: Preheating: State that the main power and the sub power are switched on and [SETUP] is not lighted (state that media setup is not completed)

Procedure

❶ **Press (MENU).**

❷

Press (▼) several times until the screen shown on the left appears.
Press (►), and then (▼).

❸

Press (►).

❹

Press (▲) (▼) to select setting.
MENU: The system performs heating to the preset temperature at all times, without lowering the temperature during preheating.
30 °C (86 °F): The system keeps 30 °C (86 °F) during preheating.
OFF: The system switches the media heating system off during preheating.

Press (ENTER) to enable the setting.

❺ 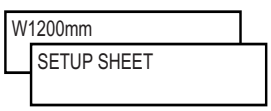

Press (MENU) to go back to the original screen.

Default Setting

[PREHEATING]: 30 °C (86 °F)

Drying the Trailing Edge of the Printing Area on the Dryer

Procedure

1. **Press MENU.**
2.

Press ▼ several times until the screen shown on the left appears.
Press ► twice.
3.

Press ▲ ▼ to select "ENABLE."
Press ENTER to enable the setting.
4. 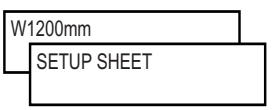

Press MENU to go back to the original screen.

Description

- "ENABLE" : media feed is performed until the trailing edge of the printing area is positioned on the dryer. The margin between the print-end position and the next print-start position is set to a value of 100 millimeters when [OPTION DRYER] is "DISABLE" or 250 millimeters when "ENABLE."
  ☞ P. 105, "Using an Optional Dryer"
- "DISABLE" : media feed stops simultaneously when printing ends. This means that the trailing edge of the printing area is not fed to the dryer unless you continue with a subsequent printing operation.

Default Setting

[FEED FOR DRY]: DISABLE

Setting the Drying Time After Printing

Procedure

1. **Press MENU.**
2.

Press ▼ several times until the screen shown on the left appears.
Press ►.
3.

Press ▼ several times until the screen shown on the left appears.
Press ►.
4.

Press ▲ ▼ to select the interval.
Press ENTER to enable the setting.
5. 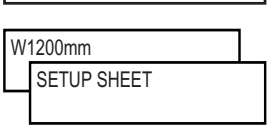

Press MENU to go back to the original screen.

Description

Set the interval after the 1st page is printed. The next operation is not started until the set time passes. (PAUSE) is lighting during the interval. When pressing (PAUSE) while (PAUSE) is lighting, the interval is finished and the next operation is started. When holding on (PAUSE) while (PAUSE) is lighting, output is canceled.

Default Setting

[DRYING TIME]: 0 min

Using an Optional Dryer

Procedure

1. **Press (MENU).**
2.

Press (▼) several times until the screen shown on the left appears.
Press (►), and then (▲).
3.

Press (►).
4.

Use (▲) (▼) to select "ENABLE."
Press (ENTER).
5. 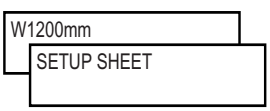

Press (MENU) to go back to the original screen.

Description

This switches the optional dryer "ENABLE" or "DISABLE".
When using an optional dryer, set [OPTION DRYER] to "ENABLE". And you can speed up drying of the ink more. Contact your authorized Roland DG Corp. dealer for recommended dryer models. For the details of how to use an optional dryer, refer to the documentation for the dryer you're using.

Default Setting

[OPTION DRYER]: DISABLE

Fully Utilizing the Correction Function

Correcting for Misalignment in Bidirectional Printing

Procedure

1. **Press (MENU).**

2. MENU ◀▲▼ / ADJUST BI-DIR ▶

   Press (▼) several times until the screen shown on the left appears.
   Press (►).

3. ADJUST BI-DIR ◀▲▼ / TEST PRINT ↵

   Press (ENTER).
   A test pattern is printed.
   When printing is completed, press (▼) (►) in this order.

4. SIMPLE SETTING ◀▲▼ / 0 ▶ + 6 ↵

   Press (▲) (▼) to select a correction value.
   Press (ENTER) to enable the setting.

To decide a Correction Value

Choose the value that produces the least misalignment of 2 lines.

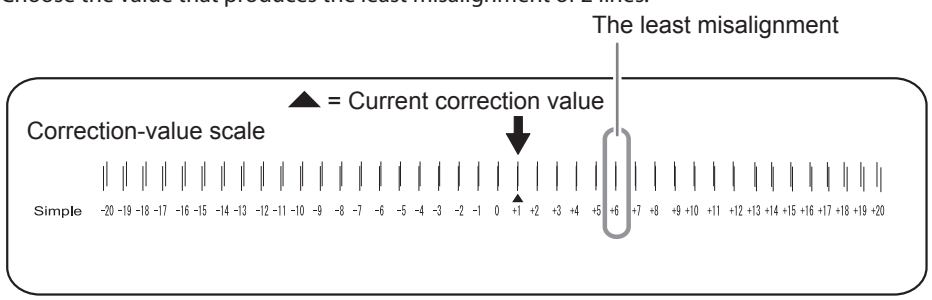

5. **Press (MENU) to go back to the original screen.**

Description

This machine prints by the bidirectional mode in which the heads perform printing during both their outbound pass and return pass. This printing method is called "Bidirectional Printing." This method offers the advantage of being able to shorten output times, but subtle misalignment occurs during the outbound and return passes. The procedure to correct this and eliminate misalignment is "Bidirectional Correction." This misalignment varies according to the head height and the thickness of the media, so we recommend performing correction to match the media you're using.
This settings also serves to correct for misalignment of the printing and cutting positions. In such cases, check or adjust this setting.

☞ P. 120, "Correcting Misalignment of the Printing and Cutting Positions"

Correcting for Misalignment in Bidirectional Printing More Precisely

When further correction is required, such as when adjustment made using [SIMPLE SETTING] does not enhance printing, use [DETAIL SETTING] to make corrections.
For information on operations, refer to P. 44, "Performing the Initial Adjustment (Correcting for Misalignment in Bidirectional Printing More Precisely)".

Alleviating Horizontal Bands and the Like (Feed Correction Function)

Procedure

1. **When the roll media is used, check that no sagging is found on the media.**
2. **Press (MENU).**
3. MENU ◀▲▼ / CALIBRATION ▶
   Press (▼) several times until the screen shown on the left appears.
   Press (►).
4. CALIBRATION ◀▲▼ / TEST PRINT ↵
   Press (ENTER).
   A test pattern is printed.
   When printing is completed, press (▼) (►) in this order.
5. SETTING ◀▲▼ / 0.00% ▶ -0.40% ↵
   Press (▲) (▼) to select a correction value.
   Press (ENTER) to enable the setting.

To decide a Correction Value
Select the value to make the upper/lower rectangular gap and overlap smallest.

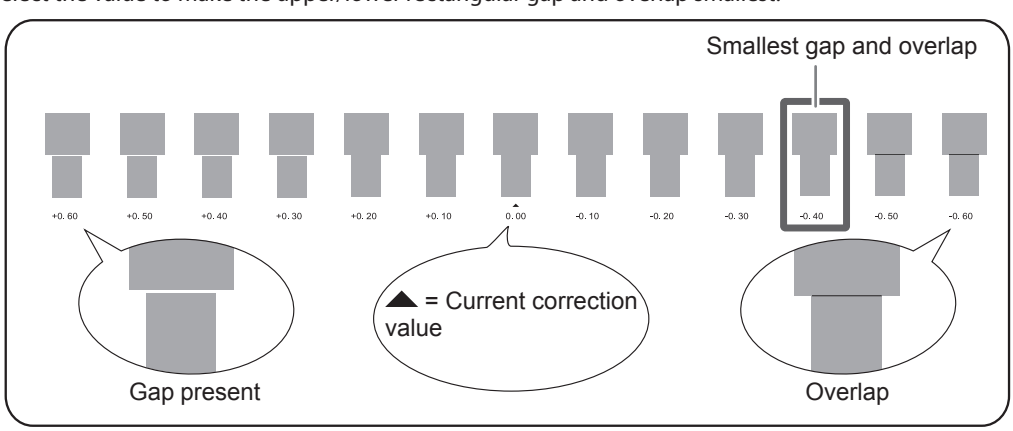

6. **Press (MENU) to go back to the original screen.**

Description

The movement distance of media experiences subtle changes due to the thickness of the media and the temperature of the media heating system. When the movement distance becomes discrepant, horizontal stripes are more likely to occur during printing. We recommend performing correction to match the media you're using and the media heating system. Repeat the process of printing a test pattern and entering a correction value several times to find the optimal value.
You can also make this setting on the RIP software computer (by, for example,choosing the media type in the software RIP you are using). When you have made the setting on the computer, the computer's setting is used and the printer's setting is ignored.

Accommodating to the Types and Condition of Media

Adjusting Head Height to Match Media Thickness

Procedure

1. **Press (MENU).**

2. MENU ◀⬍
   HEAD HEIGHT ▶

   Press (▼) several times until the screen shown on the left appears.
   Press (►).

3. HEAD HEIGHT ◀
   LOW ▶ LOW ↵

   When the left figure is displayed, open the front cover.

4. 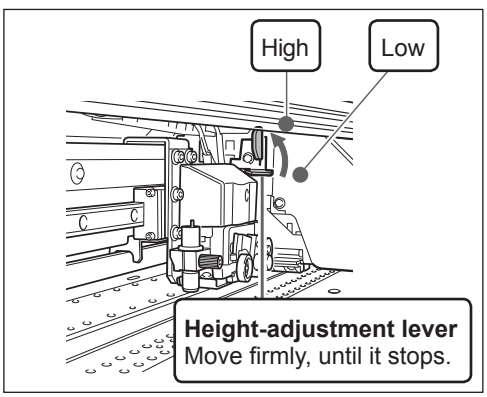

   Move the height-adjustment lever to adjust the head height.
   Moving the lever to "HIGH" makes a warning beep sound twice. Moving it to "LOW" makes the warning beep sound once.

5. MENU ◀⬍
   HEAD HEIGHT ▶

   Close the front cover.
   The print-head carriage moves to the original position, and then the screen shown in the figure appears.

6. W1200mm
   SETUP SHEET

   Press (MENU) to go back to the original screen.

Description

Depending on the media, media may wrinkle or come loose from the platen during printing, increasing the chance of contact with the print head. When you are using such media, adjust the head height to "HIGH." Printing quality when the head height is set to "HIGH" may be coarser or otherwise lower than when set to "LOW." If this happens, refer to the pages indicated below.

☞ P. 106, "Correcting for Misalignment in Bidirectional Printing"
☞ P. 44, "Performing the Initial Adjustment (Correcting for Misalignment in Bidirectional Printing More Precisely)"
☞ P. 113, "Preventing Soiling of the Media and Dot Drop-Out"

Using Transparent Media

Procedure

1. **Press (MENU).**

2. 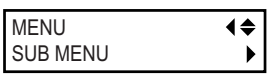

Press (▼) several times until the screen shown on the left appears.
Press (►) twice.

3.

Press (▲) (▼) to select "DISABLE."
Press (ENTER) to enable the setting.

The settings are changed and the screen shown in the figure appears.

Description

This setting enables or disables detection of the leading and trailing edges of the media. It is normally set to "ENABLE." When transparent media is loaded, set it to "DISABLE." When [EDGE DETECTION] is set to "DISABLE," printing operation does not stop when the media runs out. If media runs out while printing is in progress, immediately press (PAUSE) to quit printing. Otherwise, there is a chance that the platen or the like may become soiled by ink or that ink may get inside and damage the machine.

Default Setting

[EDGE DETECTION]: ENABLE

Printing Hard-to-Dry Media

Procedure

1. **Press (MENU).**

2. 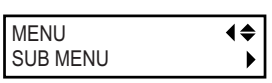

Press (▼) several times until the screen shown on the left appears.
Press (►), and then (▼).

3. 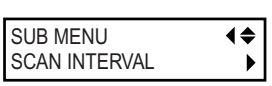

Press (►).

4. 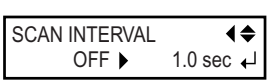

Press (▲) (▼) to select a value.
Larger values produce progressively slower movement of the media, enabling you to extend the drying time accordingly
Press (ENTER) to enable the setting.

5. 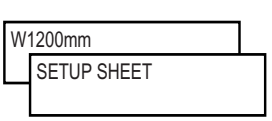

Press (MENU) to go back to the original screen.

Description

You use this when ink dries poorly even when the media heating system is used. You can also make this setting on the RIP software computer. When you have made the setting on the computer, the computer's setting is used and the printer's setting is ignored.

Default Setting

[SCAN INTERVAL]: OFF

Using the Media Easy to Be Winkled/Hard to Be Fed

Procedure

1. **Press MENU.**

2. 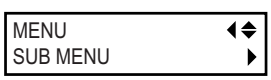

   Press ▼ several times until the screen shown on the left appears.
   Press ►.
   Press ▼ twice.

3.

   Press ►.

4. 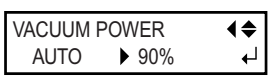

   Press ▲ ▼ to select a value.
   0 to 100%
   A larger value produces a larger suction force. For the media easy to be loose due to warping or winkling, increase of the suction force may help correct the problem. When the media is flimsy and cannot move smoothly, reduction of the suction force may correct such the problem.
   AUTO
   The suction force is automatically adjusted to the optimal level for the media width.
   Press ENTER to enable the setting.

5. 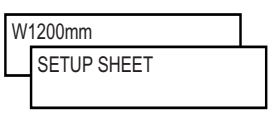

   Press MENU to go back to the original screen.

Description

The platen uses suction to grip the media and keep it stable. The suction force can be adjusted corresponding to the mature and condition of the media.
You can also make this setting on the RIP software computer. When you have made the setting on the computer, the computer's setting is used and the printer's setting is ignored.

Default Setting

[VACUUM POWER]: AUTO

Speeding Up Output for Narrow Media

Procedure

1. **Press (MENU).**

2. 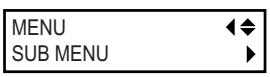

   Press (▼) several times until the screen shown on the left appears.
   Press (►).

3. 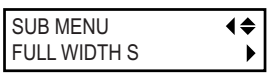

   Press (▼) several times until the screen shown on the left appears.
   Press (►).

4.

   Press (▲) (▼) to select an item.
   SHEET
   "SHEET" matches the range of head movement to the width of the media.
   OFF
   "OFF" matches the range of head movement to the output data. Movement is limited to the minimum amount necessary, and this can be expected to yield the fastest output. Note, however, that because the speed of media movement is no longer constant, colors may be uneven.
   FULL
   This makes the speed of media movement constant at all times and produces the most stable printing result.
   Press (ENTER) to enable the setting.

5. 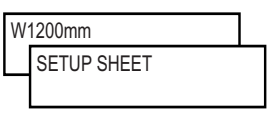

   Press (MENU) to go back to the original screen.

Description

This shortens output time by reducing the width of head movement to the minimum necessary. This is effective when the width of the media or the output data is narrow.

Default Setting

[FULL WIDTH S]: FULL

Preventing Soiling of the Media and Dot Drop-Out

Procedure

1. **Press MENU.**

2. 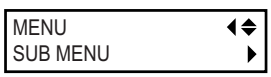

Press ▼ several times until the screen shown on the left appears.
Press ►.

3. 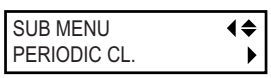

Press ▼ several times until the screen shown on the left appears.
Press ►.

4.

Press ▲ ▼ to select an item.
PAGE
Automatic cleaning is performed every time before printing starts.
10 to 990 min
Automatic cleaning is performed when the cumulative printing time reaches the value you set here.
NONE
Automatic cleaning is not performed.
Press ENTER to enable the setting.

5. 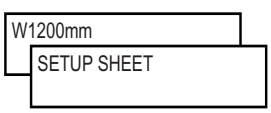

Press MENU to go back to the original screen.

Description

In the following cases, Ink tends to collect on the surface of the heads. Under some conditions, this ink may be transferred to the media or cause dot drop-out. Use this feature at such times.

- When you use media prone to buildup of static charge.
- When the ambient temperature is low.
- When the head height is set to "HIGH."

Selecting "PAGE" or a value from "10 min" to "990 min", the ink buildup is removed before or during printing while printing is performed. Note, however, that using "PAGE" or a value from "10 min" to "990 min," results in longer printing times.

Default Setting

[PERIODIC CL.]: NONE

Using Sticky Media

Procedure

1. **Press MENU.**
2. 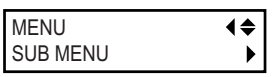

Press ▼ several times until the screen shown on the left appears.
Press ►.
3.

Press ▼ several times until the screen shown on the left appears.
Press ►.
4.

Press ▲ ▼ to select "ENABLE."
Press ENTER to enable the setting.
5. 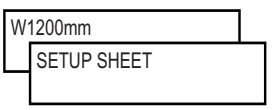

Press MENU to go back to the original screen.

Description

Some types of media may tend to stick to the platen. Starting printing with the media sticking to the platen may make normal media feed impossible and cause the media to jam. When you're using such media, set the [MEDIA RELEASE] menu item to "ENABLE." This peels off the media if sticking before starting printing. Note, however, that media feed may be unstable when printing is performed after executing this operation. Leave this menu item set to "DISABLE" unless you specifically need to change it

Default Setting

[MEDIA RELEASE]: DISABLE

Hints and Tips for Cutting Setting

- **Setting the [PREFEED] menu item to "ENABLE" makes the machine automatically feed out media and take it up again before cutting. This makes it unnecessary to run out media to the rear of the machine before the operation.**
  ☞ P. 115, "Preventing Pulling of the Media with Undue Force When Performing Cutting Only"
- **Switching off the print heater and dryer and allowing the temperature to cool before performing cutting can yield results that are more stable.**
  ☞ P. 101, "Making the Temperature Setting for the Media Heating System"
- **The tip of the blade holder cap may scrape, and soil or damage the printed surface. If this happens, increase the amount of blade extension.**
  ☞ P. 118, "Accurately Adjusting the Cutting-in Amount"

Preventing Pulling of the Media with Undue Force When Performing Cutting Only

Procedure

1. **Press (MENU).**
2.

Press (▲) to display the left figure.
Press (►).
3.

Press (▲) several times until the screen shown on the left appears.
Press (►).
4.

Press (▲) (▼) to select "ENABLE."
Press (ENTER) to enable the setting.
5. 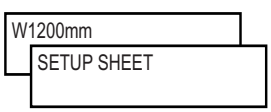

Press (MENU) to go back to the original screen.

Description

This feeds out media according to the size of the data sent from the computer before performing cutting. This makes it unnecessary to turn the media flanges by hand to feed out media every time you perform cutting. Note, however, that this feeds out media even when you're performing printing only, so set it to "DISABLE" when not needed.

Default Setting

[PREFEED]: DISABLE

Fine-Tuning the Cutting Conditions

Procedure

1 **Performing the Cutting Test.**

☞ P. 61, "Setting the Cutting Test and the Blade Force" Procedure *1*

When cutting of the test patterns is completed, press ▼.

2

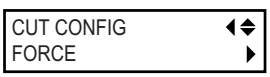

Press ▲ ▼ to select the set cutting condition.
Press ► .

[Force]
This sets the force (pressure) of the blade. (Default Setting 50gf)

[Speed]
This sets the speed of cutting. Default Setting: 30 cm/s)

[OFFSET]
This makes the blade-offset setting for the blade. Enter the listed offset value for the blade. (Default Setting: 0.250 mm)

[UP-SPEED]
This sets the blade's up speed during cutting (the speed at which the blade travels when it moves to the next cutting line after cutting one cutting line). If the media comes loose during no-load feed and the blade damages the surface of the media, reduce the speed. (Default Setting: 30 cm/s)

3

Press ▲ ▼ to select a value.
Press ENTER to enable the setting.

For information on the evaluation method of cutting test, refer to the next page.

Evaluating the Results of a Cutting Test

Check the shape of the test pattern.

The cut shape is distorted. ⇨ Decrease the value of [Speed].

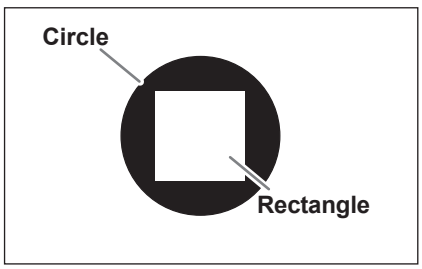

Peel off the circle.

The rectangle also peels off. ⇨ Increase the value of [Force].

Some uncut areas remain. ⇨ Decrease the value of [Speed].

Peel off the rectangle.

The blade should leave faint traces on the backing paper. ⇨ Do not change the value of [Force].

The blade trace is indistinct. ⇨ Increase the value of [Force].

The blade trace is too deep and cuts into the backing paper. ⇨ Decrease the value of [Force].

Check the shape of the rectangle.

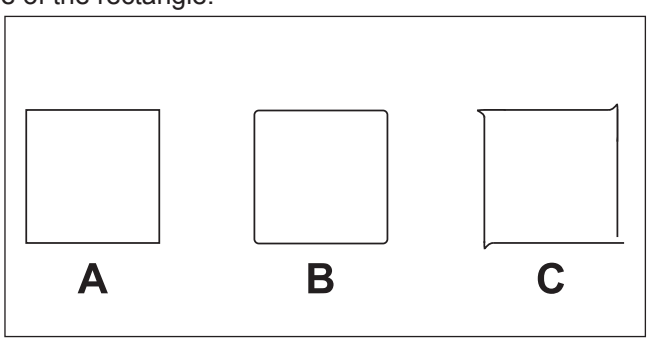

A ⇨ Do not change the value of [OFFSET].

B The corners are rounded. ⇨ Increase the value of [OFFSET].

C The corners have "horns." ⇨ Decrease the value of [OFFSET].

4 W1200mm

Press FUNCTION to go back to the original screen.

Accurately Adjusting the Cutting-in Amount

When you want to perform accurate and fine adjustment of the cutting-in amount, such as when cutting media with thin backing paper, you can obtain good results by adjusting the tip of the blade. Turn the cap portion of the blade holder to adjust the amount of blade extension. Each indicator tick corresponds to 0.1 millimeters, and adjustment for 0.5 millimeters can be made by rotating the cap one full turn.
Note that making the amount of blade extension too small may cause the tip of the blade holder cap to touch, and may soil and damage the printed surface. It's important to be especially careful about this when you're using media that has poor ink adhesion properties.

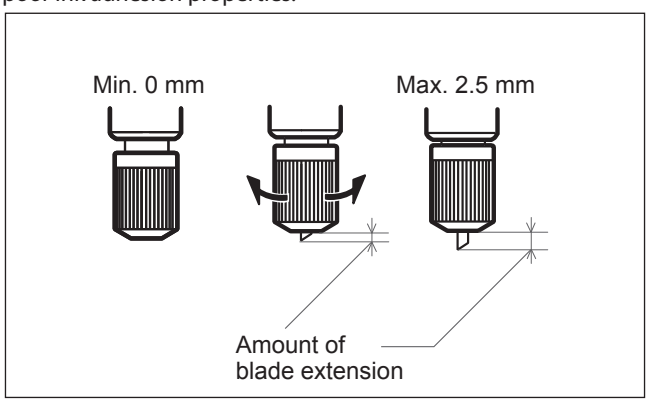

Rough Estimate for the Amount of Blade Extension

Use the following dimension as a rough estimate for setting the amount of blade extension.

$$\text{Amount of blade extension} = \text{Thickness of the material portion} + \frac{\text{Thickness of the backing paper}}{2}$$

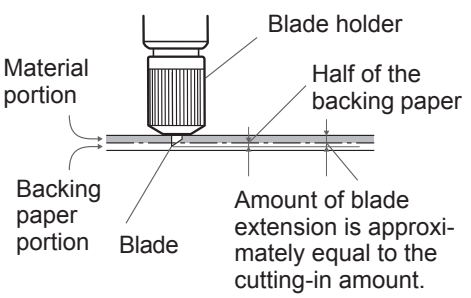

Performing Distance Correction During Cutting

* When you're performing printing followed by cutting, be sure to set the correction value to "0.00%." Otherwise the printing and cutting positions may become misaligned.

Procedure

1. **Press MENU.**

2.

Press ▲ to display the left figure.
Press ►.
Press ▼ twice.

3. 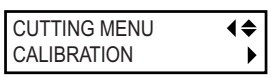

Press ►.

4.

Press ►.

Press ▲ ▼ to select a correction value.
Set the correction value of media feed direction.
Press ENTER to enable the setting.
Press ◄, and then ▼.

5. 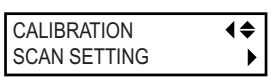

Press ►.

Press ▲ ▼ to select a correction value.
Set the correction value of cutting carriage movement direction.
Press ENTER to enable the setting.

6. 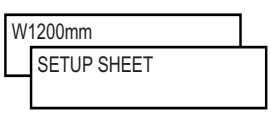

Press MENU to go back to the original screen.

Description

The movement distance of the media changes subtly depending on the media's thickness. This means that the length of a line when cut may differ from the length setting in the data. You enter a correction value when you want to align the lengths

Default Setting

[FEED SETTING]: 0.00%
[SCAN SETTING]: 0.00%

Correcting Misalignment of the Printing and Cutting Positions

Note: When performing this setting, make sure to set the correction value of [CUTTING MENU CALIBRATION] to "0.00%."

☞ P. 119, "Performing Distance Correction During Cutting"

Procedure

1 Make sure the [AUTO ENV. MATCH] menu item is set to "ENABLE."

☞ P. 123, "Viewing the Automatic Environment Correction Function Settings"

2 Perform bidirectional adjustment.

☞ P. 106, "Correcting for Misalignment in Bidirectional Printing"
☞ P. 107, "Correcting for Misalignment in Bidirectional Printing More Precisely"

3 Press (MENU).

4

MENU	◀⬍
CUTTING MENU	▶

Press (▲) to display the left figure.
Press (►).

5

CUTTING MENU	◀⬍
PRINT - CUT ADJ.	▶

Press (►).

6

PRINT - CUT ADJ.	◀⬍
TEST PRINT	↵

Press (ENTER).
The test pattern (P&C1) is printed and cut. The test pattern is printed at three locations on the media: at the two edges and in the center.

When adjustment is needed, go on to the next Procedure.

To check the test pattern (P&C1)
Check to make sure that the printing position and the cutting position are aligned.

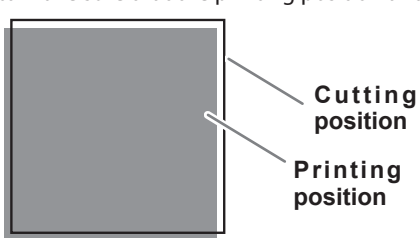

Printing position and Cutting position are misaligned.

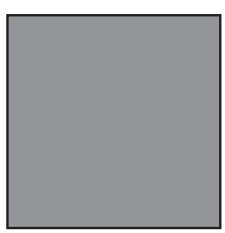

Printing position and Cutting position are aligned.

7

PRINT - CUT ADJ.	◀⬍
TEST PRINT 2	↵

Press (▲) to display the left figure.
Press (ENTER).
The test pattern (P&C2) is printed and cut.

For information on the method of test pattern check, refer to the next page.

To check the test pattern (P&C2)

The point where the cutting line intersects the correction-value scale is the correction value. Check the scan direction and the feed direction respectively.

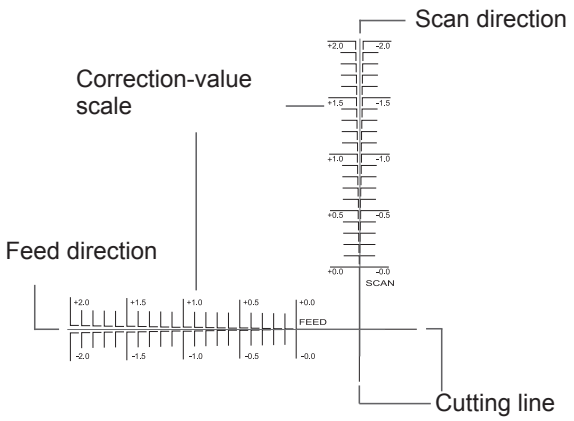

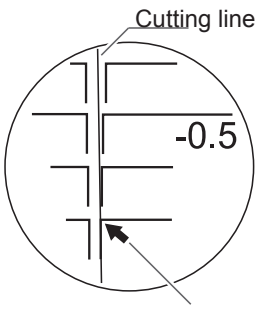

For the figure, the correction value is “-0.3.”

❽ PRINT - CUT ADJ. ◀▲▼
SETTING ▶

Press ▲ to display the left figure.
Press ► .

❾ F :- 0.30 ▶ - 0.30mm
S : 0.00 ▶ - 0.20mm ↵

Press ▲ ▼ to select a correction value of [F] (feed direction of media).
Press ◄ ► to select a correction value of [S] (movement direction of head).
Press ENTER to enable the setting.

❿ PRINT - CUT ADJ. ◀▲▼
TEST PRINT ↵

Press MENU ▲ in this order to display the left figure.
Press ENTER .

The test pattern (P&C1) is printed and cut. If the printing and cutting lines are aligned, adjustment is complete. If further adjustment is needed, go back to Procedure ❾ and fine-tune the adjustment.

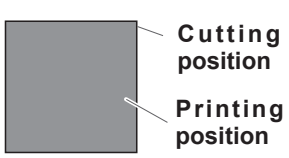

Printing position and Cutting position are aligned.

Description

You perform this when printing followed immediately by cutting yields positioning for printing and cutting that is slightly misaligned. You print alignment marks, perform detection of the printed marks, and correct the discrepancy. Subtle misalignment between the printing and cutting positions may occur due to the thickness of the media or the head height. We recommend making correction to match the media you're using.

Default Setting

[F] (correction value of media feed direction): 0.00mm
[S] (correction value of head movement direction): 0.00mm

Prioritize the Cuttings Setting of This Machine to the Settings of a Computer Side in RIP Software

Procedure

1. **Press** (MENU).
2.

Press ▲ to display the left figure.
Press ►.
Press ▲ twice.
3.

Press ►.
4.

Press ▲ ▼ to select "MENU."
Press (ENTER) to enable the setting.
5. 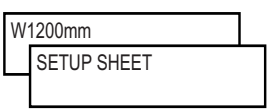

Press (MENU) to go back to the original screen.

Description

You can also make the settings for the cutting conditions using the RIP software computer. By default, the settings made with the computer take priority. To make the cutting conditions set on the machine take priority, either turn off the settings of the computer or make the setting described above.

Default Setting

[CUTTING PRIOR]: COMMAND

Viewing the Automatic Environment Correction Function Settings

The automatic environment correction function is the function that adjusts automatically to the optimal condition of this machine according to the operating environment (humidity and temperature). Performing automatic adjustment can reduce misalignment in the scanning direction (the direction of cutting carriage movement) during printing or cutting. Normally set to "ENABLE."

Procedure

1. **Press (MENU).**
2.

Press (▲) to display the left figure.
Press (►), and then (▲).
3.

Press (►).
4.

Current setting
Setting after changed
Check that setting is "ENABLE."
Press (▲) (▼) to select an item to change the setting.
Press (ENTER) to enable the setting.
5. **Press (MENU) to go back to the original screen.**

Default Setting

[AUTO ENV. MATCH]: ENABLE

Correcting Misalignment of the Printing and Cutting Positions During Cutting

Procedure

1. 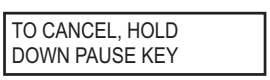

Press (PAUSE) during a cutting operation.
The cutting operation is stopped temporarily.
2. **Press (FUNCTION).**
3.

Press (▲) to display the left figure.
Press (►).
4.

Press (▲) to display the left figure.
Press (►).

5 **Check the correction value.**

Method of adjusting correction value

If the cutting position is misaligned, use the cursor keys to adjust the position.

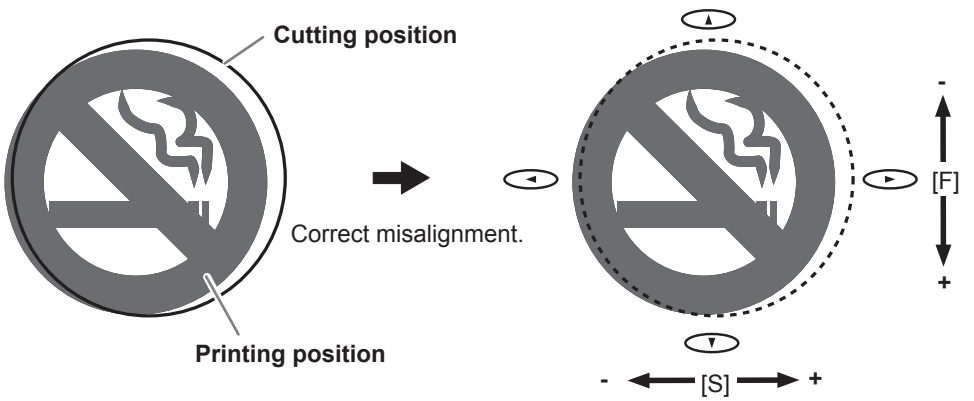

Printing position and Cutting position are misaligned.

[F] (feed direction of media)
[S] (movement direction of cutting carriage)

6

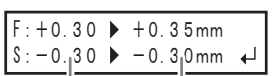

Current setting — Setting after changed

Press ▲ ▼ to select a correction value of [F] (feed direction of media).
Press ◄ ► to select a correction value of [S] (movement direction of cutting carriage).
Press ENTER to enable the setting.

7

Press MENU to display the left figure.

8

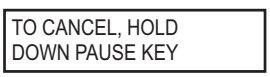

Press PAUSE.
The left figure can be displayed by pressing MENU or FUNCTION.
Press PAUSE again.
The cutting operation is resumed.
At this time, to Hold down PAUSE for one second or longer cancels the cutting operation.
☞ P. 64, "Pausing and Canceling Output"

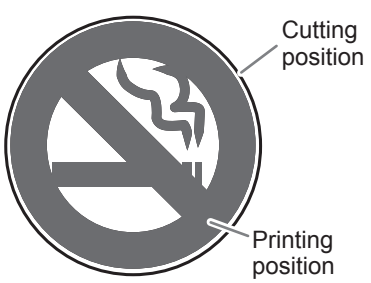

If the printing and cutting lines are aligned, adjustment is complete. If further adjustment is needed, go back to procedure **1** and fine-tune the adjustment.

Printing position and Cutting position are aligned.

Description

This machine allows you to stop a cutting operation temporarily to correct the misalignment of the printing and cutting positions. The correction values set here take effect as the default values of the printing and cutting positions.
If the printing and cutting positions are misaligned, normally, you adjust the positions while checking a test pattern.

☞ P. 120, "Correcting Misalignment of the Printing and Cutting Positions"

Default Setting

[F] (correction value of media feed direction): 0.00 mm
[S] (correction value of cutting carriage movement direction): 0.00 mm

Performing Printing and Cutting Separately

To Perform Printing and Cutting Separately

You can remove the printed media and then reload it and perform cutting.
(Example: Perform lamination or other processing after printing, then reload the media and perform cutting.)
Then, carry out alignment to prevent misalignment of the printing results and the cut lines. Perform this adjustment in the next Procedure.

Procedure

1 Printing with Crop Marks.

☞ P. 126, "Printing with Crop Marks"

2 Align to the printed crop marks and perform cutting.

You can detect the crop marks automatically or manually.

☞ P. 128, "Aligning Automatically and Cutting" P. 130, "Aligning Manually and Cutting"

Note: Correct misalignment of the printing and cutting positions, if applicable.

☞ P. 131, "Correcting Misalignment for Printing and Cutting When Using Crop Marks"

Printing with Crop Marks

Use your software RIP to make the settings for printing crop marks. For information on how to make the setting, refer to the documentation for the software RIP you're using.

IMPORTANT!

Alignment marks and symbols drawn using a graphics program cannot be used as crop marks.

The crop marks are printed as shown in the figure.

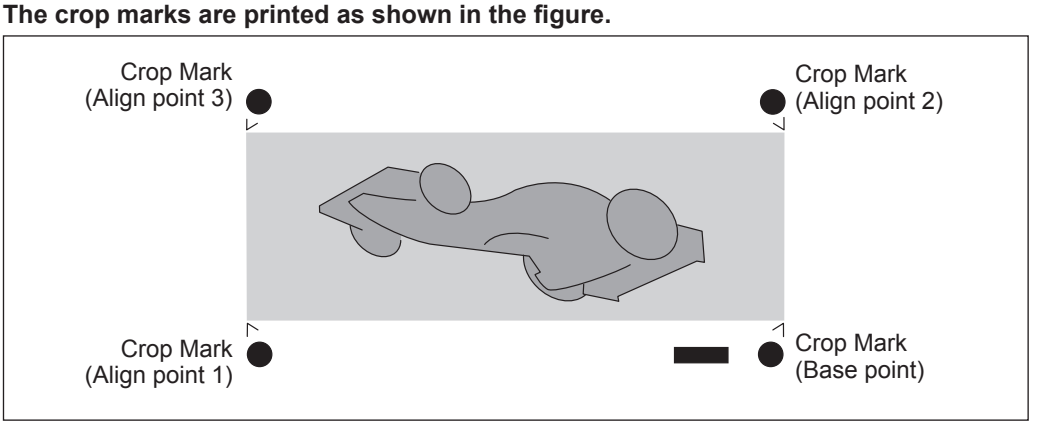

Media Sizes Allowing Automatic Crop Mark Detection

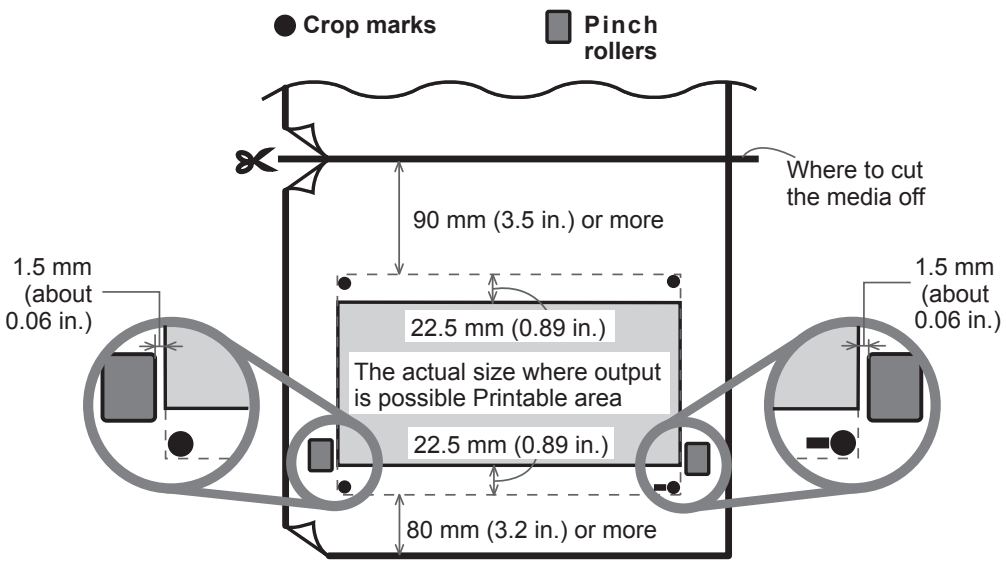

When you are printing with crop marks, set a margin of at least 90 mm (3.5 in.) before the next print-start position. You can set the margin value with the software RIP you're using. For information on how to make the setting, refer to the documentation for the software RIP you're using.

Aligning Automatically and Cutting

When you make the setting for reading crop marks when sending cutting data from the computer, alignment is performed with the presence or absence of crop marks determined automatically. For information on how to make the setting, refer to the documentation for the software RIP you're using.

Points for Media Setting

Place the crop marks on the blade protector.

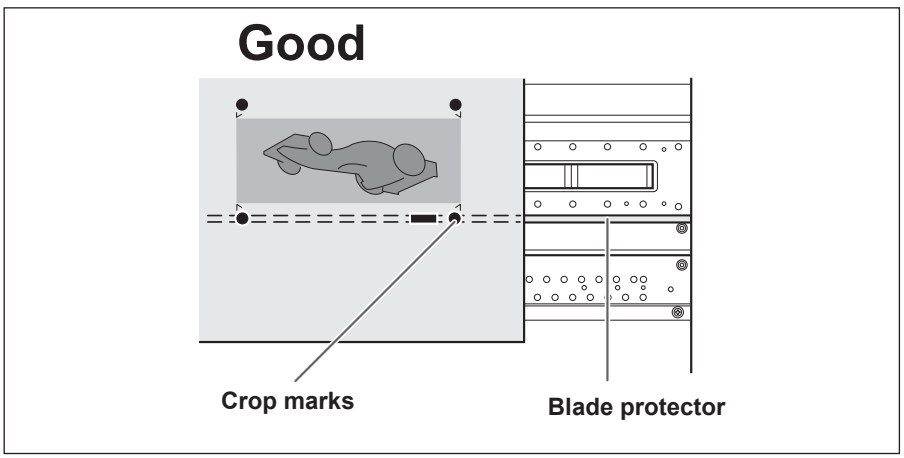

Angled no more than 5 degrees. Otherwise alignment becomes impossible.

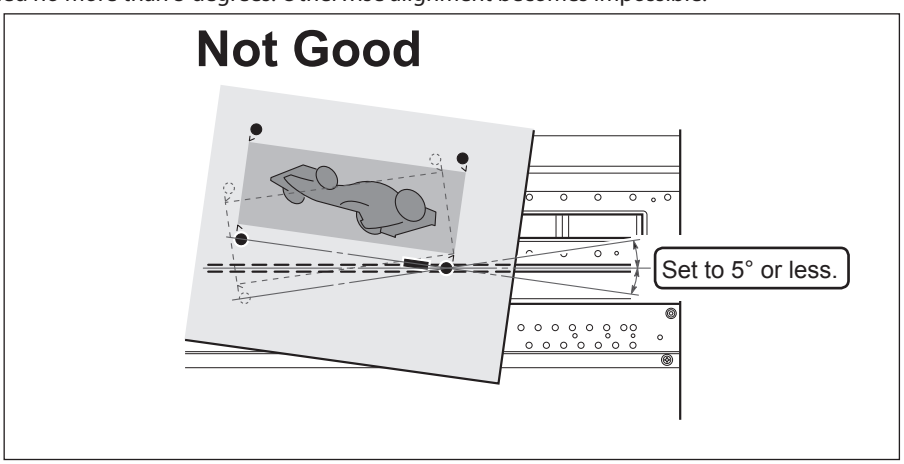

If Automatic Alignment Cannot Be Performed

If the machine fails to detect the crop marks, the screen shown in the figure appears and operation stops. Press ENTER then the screen goes back to the previous screen. Reload the media, and then send the data again. Reload the media, and then send the data again.

* When you want to perform automatic alignment with lengthy media, we recommend performing output with the data separated into sizes that are as short as possible.

The crop marks cannot be detected easily because of the effects of media warping or the like. With large sizes, error due to warping and the like increases, making smooth detection impossible. In such the cases, perform alignment manually.

☞ P. 130, "Aligning Manually and Cutting"

To Quit Detection and Start Cutting

Procedure

❶ **Press PAUSE during detection of crop marks.**
Crop-mark detection stops. Depending on the content of the data, some time may pass before detection actually stops.

❷

Press ENTER.
This stops detection and starts cutting.

* Note: After pressing PAUSE in Procedure ❶, resuming detection or canceling output is also possible.

☞ P. 64, "Pausing and Canceling Output"

Aligning Manually and Cutting

Depending on the type of media, it may not be possible to detect crop marks automatically. When crop marks cannot be detected automatically, you perform alignment manually.

1. Set the base point.

❶

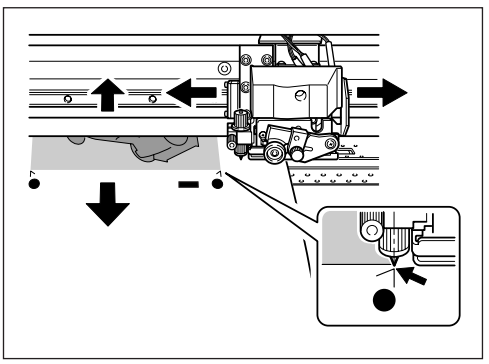

Use ◄ ► ▲ ▼ to align the center of the blade with the location shown in the figure.

❷

FUNCTION ◄▲▼
BASE POINT ↵

Press FUNCTION to display the left figure.

W1100mm
B

Press ENTER.
BASE POINT is set.

2. Set the align points.

❶

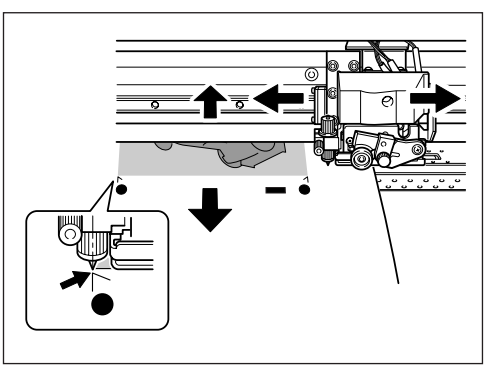

Use ◄ ► ▲ ▼ to align the center of the blade with the location shown in the figure.

❷

FUNCTION ◄▲►
BASE POINT ↵

Press FUNCTION to display the left figure.
Press ►.

❸ BASE POINT ◀
ALIGN POINT 1 ↵

Press (ENTER).
The number of the align point you set is automatically determined.

W1100mm
B1

This indicates that the base point and align point 1 have been set.

ALIGN POINT is set.

❹ **Repeat Procedure ❶ to ❸ to specify other align points as required.**

❺ **Send the cutting data and perform cutting.**

POINT! About Align Points

The numbers for align points are determined with reference to the location of the base point. You cannot set an align point unless you specify a base point. Redoing the setting for the base point clears any align points that have been set.

Correcting Misalignment for Printing and Cutting When Using Crop Marks

Note: When performing this setting, make sure to set the correction value of [CUTTING MENU CALIBRATION] to "0.00%."

☞ P. 119, "Performing Distance Correction During Cutting"

Procedure

❶ **Make sure the [AUTO ENV. MATCH] menu item is set to "ENABLE."**

☞ P. 123, "Viewing the Automatic Environment Correction Function Settings"

❷ **Perform bidirectional adjustment.**

☞ P. 106, "Correcting for Misalignment in Bidirectional Printing" P. 107, "Correcting for Misalignment in Bidirectional Printing More Precisely"

❸ **Press (MENU).**

❹ MENU ◆▲▼
CUTTING MENU ▶

Press (▲) to display the left figure.
Press (►), and then (▼).

❺ CUTTING MENU ◆▲▼
CROP - CUT ADJ. ▶

Press (►).

6 CROP - CUT ADJ. / TEST PRINT

Press ENTER.

The test pattern (C&C1) is printed and cut.

When adjustment is needed, go on to the next Procedure.

To check the test pattern (C&C1)

Check to make sure that the printing position and the cutting position are aligned.

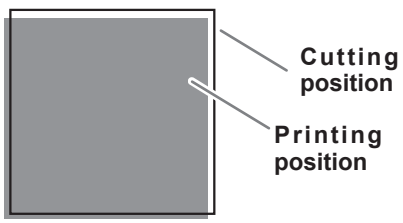

Printing position and Cutting position are misaligned.

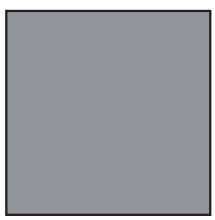

Printing position and Cutting position are aligned.

7 CROP - CUT ADJ. / TEST PRINT 2

Press ▲ to display the left figure.

Press ENTER.

The test pattern (C&C2) is printed and cut.

To check the test pattern (C&C2)

The point where the cutting line intersects the correction-value scale is the correction value. Use the same method to read the value on the scan direction and the feed direction.

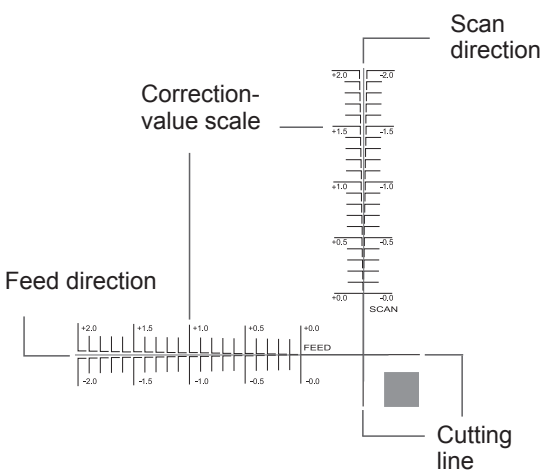

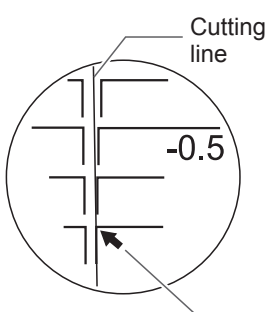

In this figure, the value is "-0.3."

8 CROP - CUT ADJ. / SETTING

Press ▲ to display the left figure.

Press ► .

❾

Press ▲ ▼ to select a correction value of [F] (feed direction of media).
Press ◄ ► to select a correction value of [S] (movement direction of head).
Press ENTER to enable the setting.

❿

Press MENU ▲ in this order to display the left figure.
Press ENTER.
The test pattern (C&C1) is printed and cut. If the printing and cutting lines are aligned, adjustment is complete. If further adjustment is needed, go back to Procedure ❾ and fine-tune the adjustment.

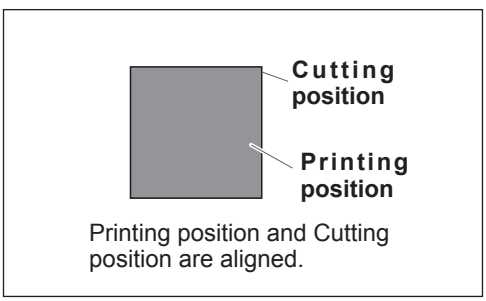

Printing position and Cutting position are aligned.

Description

Depending on the composition of the media, the positioning of printing and cutting may be misaligned even when you're using crop marks. Make corrections for misaligned printing and cutting for the media you're using.

Default Setting

[F] (feed direction): 0.00 mm
[S] (scanning direction): 0.00 mm

Using Media Take-Up System

Use the Media Take-Up System When the Output Accompanied with the Pull-Back Operation Is Performed

Note: The media take-up system (hereinafter called take-up system) is optional part.
Note: For information on how to assemble and install the take-up system, refer to the user's manual of the take-up system.
Note: For information on the output not accompanied with the pull-back operation, refer to the user's manual of the take-up system.

If you use the take-up system when the output accompanied with the pull-back operation is performed, perform the following procedures before use of it.

Procedure

1. **Move the dancer roller toward the rear.**
2. SETUP SHEET
   ◆▶TU2

   Turn on the sub power, and select "TU2" by pressing ◄ ► when the left figure is displayed.

Then, operate according to the procedure in the user's manual of the media take-up system.

Use Conditions of Take-Up System When "TU2" Is Selected

The use conditions vary according to the selections of "TU2" (accompanying the pull-back operation) and "TU" (not accompanying the pull-back operation). When you select "TU", be sure to comply with the use conditions in the user's manual of the take-up system. When you select "TU2", be sure to comply with the following conditions.

- **Do not operate the manual switch on the take-up system leaving the loading lever lower.**
- **Do not feed the media reversely by pressing ▲.**
  It may cause an error because the media is pulled with excessive force.

- **Do not use the automatic cut-off function.**
  When the setting to execute automatic cutoff of the media is made on the RIP software, media cutoff is performed when printing of one page finishes. When you're performing continuous printing and take-up for two or more pages, turn off the automatic-cutoff feature on the RIP software. Take-up quits as soon as the media is cut off.

About Length Output at One Time

If the length of output at one time is too long, the media may get soiled by touching the work floor. To avoid the media from getting soiled by touching the floor, output the media by about 300 mm.
To output by limiting the length, use the function of RIP software.

☞ The setting method when using Roland VersaWorks is continued on next page.

How to Output by Limiting Length (Roland VersaWorks)

This section describes "how to output by limiting the length" using Roland VersaWorks (hereinafter RVW). For information on the detail usage of RVW, refer to the user's manual of RVW.

Procedure

1 **Open "Que Properties" window (or "Job Setting" window).**
Select the input folder to be used.

2

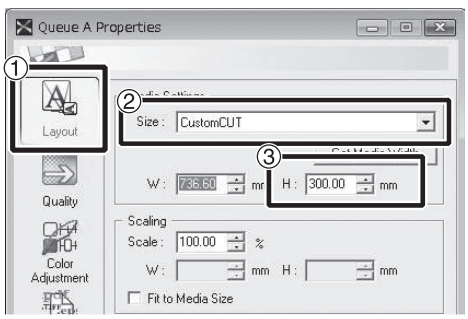

"Que Properties" window
(The setting item and the method in "Job Setting" window are the same as this procedure.)

① Click .
② Select "CustomCUT" from [Size] under "Media Settings."
③ Set "H."

Test Print Direction

When performing printing tests successively, you can select "FEED" or "SCAN" as the print direction. However, when the optional media take-up system is used, "Feed" is applied regardless of the setting of the test print direction.

Chapter 5
To Administrators

Output Operation Management 138
- Printing a System Report 138
- Determining What Happens When Ink Runs Out 138
- Displaying the Amount of Media Remaining 139
- Making Sure to Verify the Setting for the Amount Remaining Every Time the Media Is Changed 140
- Printing the Amount of Remaining Media 141

System Management of Printer 142
- Setting for the Menu Language and the Units of Measurement 142
- Setting the Interval Until Activation of the Sleep Mode (Power Saving Function) 142
- Viewing Information About the System of This Machine 143
- Returning All Settings to Their Initial Values 144

Output Operation Management

Printing a System Report

This prints system information, including a list of setting values.

Procedure

1. **Press (MENU).**
2. 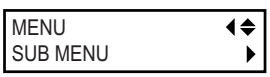

Press (▼) several times until the screen shown on the left appears.
Press (►).
3.

Press (▼) several times until the screen shown on the left appears.
Press (ENTER).
Start printing.
4. 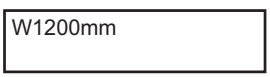

Press (MENU) to go back to the original screen.

Determining What Happens When Ink Runs Out

This lets you change, according to your purpose, the operation that takes place when an ink cartridge is empty.

Procedure

1. **Press (MENU).**
2. 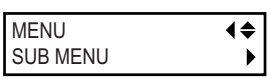

Press (▼) several times until the screen shown on the left appears.
Press (►).
3. 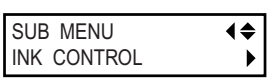

Press (▲) several times until the screen shown on the left appears.
Press (►) twice.
4. 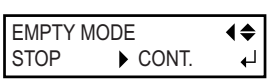

Press (▲) (▼) to select.
STOP: Printing pauses immediately when a cartridge becomes empty.
CONT (continue): Printing does not stop when a cartridge becomes empty.
When a cartridge becomes empty, a warning beep sounds.
Press (ENTER) to enable the setting.
5. 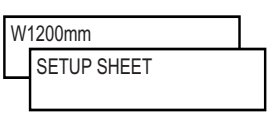

Press (MENU) to go back to the original screen.

Description

When "STOP" is selected, printing pauses and so colors may be uneven. Ensure a sufficient amount of remaining ink before you begin printing.
When "CONT" is selected, printing does not stop even if ink runs out completely. To replace the cartridge, wait until printing ends or press (PAUSE) to pause printing.

Default Setting

[EMPTY MODE]: STOP

Displaying the Amount of Media Remaining

You can display how much of the media in use is left. First, you set the amount of media remaining, the amount remaining is displayed at the top menu until it reaches zero.

Procedure

1. **Press (MENU).**
2. MENU / SHEET REMAIN ◀▲▼ ▶
   Press (▲) twice to display the left figure.
   Press (►), and then (▼).
3. SHEET REMAIN / SET LENGTH
   Press (►).
4. SET LENGTH / 0.0 m ▶ 25.0 m ↵
   Press (▲) (▼) to set the current amount of media remaining.
   Press (ENTER) to enable the setting.
5. W1200mm L 25.0m
   Press (MENU) to go back to the original screen.

This display is updated.

SETUP SHEET / L 25.0 m

If setup has not been performed, the set value flashes.

Description

If you cancel the setup such as by removing the media or raising the loading lever, the amount remaining at that time flashes on the screen.
Because the amount of media remaining is not updated automatically when you change the media, redo the setting whenever you change the media. You can also make the setting to display this menu automatically whenever you change the media. See the next section, P. 140, "Making Sure to Verify the Setting for the Amount Remaining Every Time the Media Is Changed"
Note: The remaining amount that is displayed is only an estimate, and its accuracy is not assured.

Making Sure to Verify the Setting for the Amount Remaining Every Time the Media Is Changed

Set to display SET LENGTH / 0.0 m ▶ 25.0 m ↵ every time when a media is changed.

Procedure

1. **Press MENU.**

2. MENU / SHEET REMAIN ▶

   Press ▲ twice to display the left figure.
   Press ► .
   Press ▼ twice.

3. SHEET REMAIN / AUTO DISPLAY ▶

   Press ► .

4. AUTO DISPLAY / DISABLE ▶ ENABLE ↵

   Press ▲ ▼ to select "ENABLE".
   Press ENTER to enable the setting.
   If you set to "ENABLE", you must set the [EDGE DETECTION] menu to "ENABLE."
   ☞ P. 110, "Using Transparent Media"

5. **Press MENU to go back to the original screen.**

Description

Setting this menu to "ENABLE" can keep you from forgetting to redo the setting when you change the media. Be sure, however, also to set the [EDGE DETECTION] menu (refer to P. 110, "Using Transparent Media") to "ENABLE." When [EDGE DETECTION] is set to "DISABLE," [SHEET REMAIN] is not displayed automatically.

Default Setting

[AUTO DISPLAY]: DISABLE

Printing the Amount of Remaining Media

This prints the amount of media remaining that is displayed at the top menu.

Procedure

1. **Press MENU.**
2.

Press ▲ twice to display the left figure.
Press ►.
3. 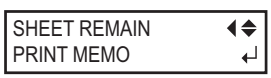

Press ENTER.
Start printing.
4. 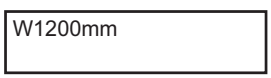

Press MENU to go back to the original screen.

Description

You use this when you want to make a record of the remaining length of the media now in use. Printing the amount of media remaining before you change the media enables you to refer to the printed record and use the value to make the setting for the remaining amount the next time you use the media.
Note, however, that continuing by performing the next output starts the output on top of the portion where the amount of remaining media is printed. After printing the amount remaining, then before you perform the next output operation, we recommend cutting off the media.

Setting for the Menu Language and the Units of Measurement

This sets the language and units of measurement displayed on the display screen of the operation panel.

Procedure

1. **Hold down (MENU) and switch on the sub power.**
2. 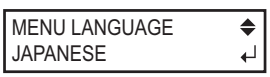

Use (▲) (▼) to select the display (menu) language.
Press (ENTER) to enable the setting.
3.

Use (▲) (▼) to select the measurement unit for length.
Press (ENTER) to enable the setting.
4.

Use (▲) (▼) to select to the measurement unit for temperature.
Press (ENTER) to enable the setting.

Default Setting

[MENU LANGUAGE]: ENGLISH
[LENGTH UNIT]: mm
[TEMP. UNIT]: ˚C

Setting the Interval Until Activation of the Sleep Mode (Power Saving Function)

Procedure

1. **Press (MENU).**
2. 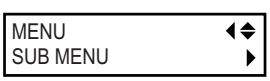

Press (▼) several times until the screen shown on the left appears.
Press (►).
3. 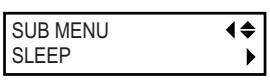

Press (▲) several times until the screen shown on the left appears.
Press (►) twice.
4.

Use (▲) (▼) to make the setting.
Press (ENTER) to enable the setting.
5. 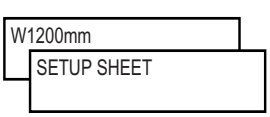

Press (MENU) to go back to the original screen.

Default Setting

[INTERVAL]: 30min

Viewing Information About the System of This Machine

Note: For information on how to set up a network, refer to "Setup Guide."

Procedure

1. **Press (MENU).**

2. MENU
   SYSTEM INFO.

   Press (▲) several times until the screen shown on the left appears.

   You can view the following information.
   [MODEL]: Model name
   [SERIAL NO.]: Serial number
   [INK]: Ink type
   [FIRMWARE]: Firmware version
   [NETWORK]: Network configuration (IP address, etc)

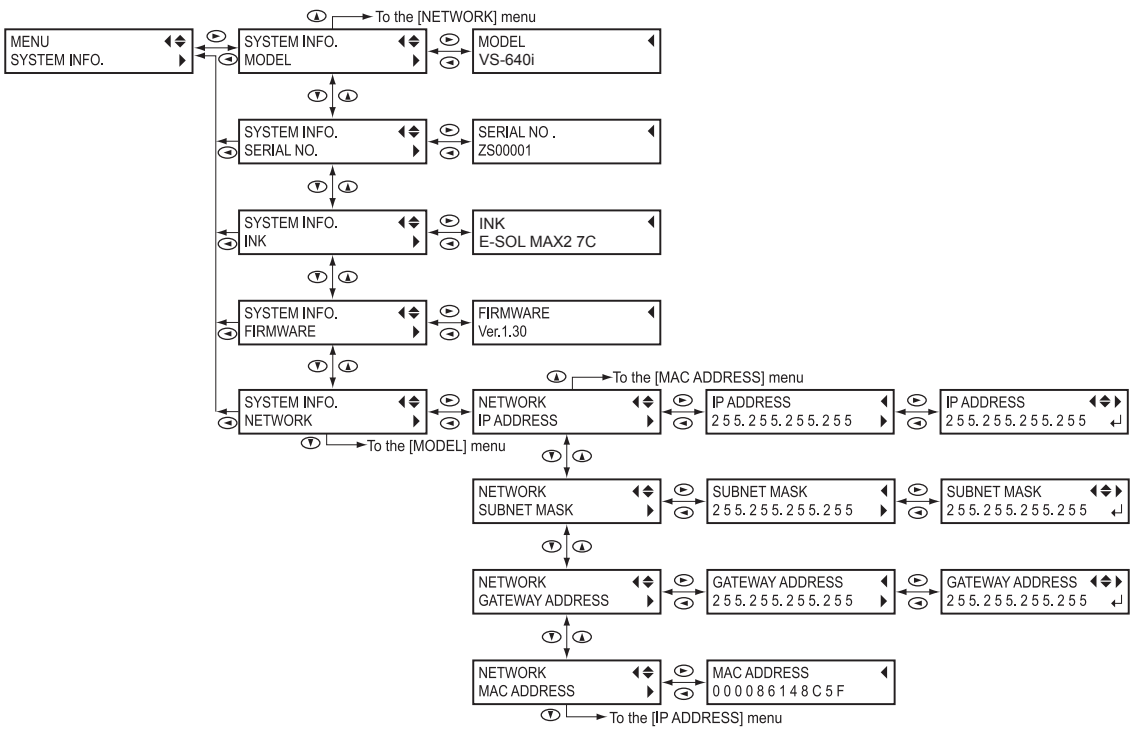

Returning All Settings to Their Initial Values

This menu returns all settings to the same as their factory defaults. However, the settings for [MENU LANGUAGE], [LENGTH UNIT], and [TEMP. UNIT] are not returned to the factory defaults.

Procedure

1. **Press (MENU).**

2. 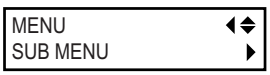

Press (▼) several times until the screen shown on the left appears.
Press (►).

3.

Press (▼) several times until the screen shown on the left appears.
Press (ENTER) to execute.

Chapter 6
Read This Chapter Whenever You Face a Problem. (FAQ)

Attractive Printing or Cutting Is Impossible 146
- Printed Results Are Coarse or Contain Horizontal Stripes 146
- Colors Are Unstable or Uneven 147
- The Media Becomes Soiled When Printed 148
- Cutting Is Misaligned or Skewed 148

Media Jam Occurs! 150
- The Media Jams 150

Media Feed Is Not Smooth 151
- Media Wrinkles or Shrinks 151
- Media Feed Is Not Straight 152
- Media Feed Is Not Smooth 152

Print Head Stops Moving. Why? 153
- What to Do First 153
- If the Heads Still Do Not Move 153

Other Problems 155
- The Printer Unit Doesn't Run 155
- The Media Heating System Doesn't Warm Up 156
- Cannot Cut Off the Media 156
- Discharged Fluid Level Cannot Be Checked. 157

A Message Appears 158

An Error Message Appears 159

Attractive Printing or Cutting Is Impossible

Printed Results Are Coarse or Contain Horizontal Stripes

Do the print heads show dot drop-out?

Carry out a printing test and make sure no dot drop-out occurs. If dot drop-out is present, perform head cleaning.

☞ P. 58, "Printing Tests and Cleaning"
☞ P. 74, "When Normal Cleaning Is Not Effective"

Is the head height appropriate?

Printing when the [HEAD HEIGHT] menu item is set to "HIGH" is coarser than when set to "LOW." Keep this set to "LOW" except when changing it is necessary, such as when you're using thick media.

☞ P. 109, "Adjusting Head Height to Match Media Thickness"

Have you carried out feed correction?

Large misalignment in the amount of feed of the media may result in printing that seems coarse or contains horizontal stripes. Either make the setting on the computer to match the type of media you're using, or make the setting for correction on the printer.

☞ P. 107, "Alleviating Horizontal Bands and the Like (Feed Correction Function)"

Have you carried out bidirectional correction?

When you are performing bidirectional printing, use the [ADJUST BI-DIR] menu item to carry out correction. The optimal adjustment value may vary, depending mainly on the thickness of the media. Set or select an adjustment value that is suited to the media. When further correction is required, such as when adjustment made using [SIMPLE SETTING] does not enhance printing, use [DETAIL SETTING] to make correction.

☞ P. 106, "Correcting for Misalignment in Bidirectional Printing"
☞ P. 107, "Correcting for Misalignment in Bidirectional Printing More Precisely"

Is the print heater at a suitable temperature?

If the ink forms lumps or smudges, raise the temperature. Note, however, that a temperature that is too high may degrade the media or cause it to wrinkle.

☞ P. 101, "Fully Utilize the Media Heating System"

Is the temperature of the room too low?

The media heating system may not warm up sufficiently when the ambient temperature is less than 20°C (68°F). Also, even when the media heating system reaches its preset temperatures, adequate effectiveness may not be apparent if the media is thoroughly chilled. Before printing, allow the media to come to room temperature.

Is the print mode suitable?

If attractive printing is impossible even when the media heating system is at a high temperature, try using a higher-quality print mode. Depending on the media, smudging may occur when using a high-quality print mode, and results may also vary greatly depending on the settings of your software RIP (such as the color-profile selection). Make settings suited to the media you're using.

Is the printer installed in a level and stable location?

Never install the machine in a location where it is tilted or where it may wobble or experience vibration. Also make sure that the print heads are not exposed to moving air. These factors may lead to missing dots or reduced printing quality.

Is the media loaded and set up correctly?

If the media is not loaded and set up correctly, media feed may not be smooth, or printing may be adversely affected. Make sure the media is loaded and set up correctly.

☞ P. 152, "Media Feed Is Not Smooth"

Are the settings for the [PRESET] menu item appropriate?

If the settings selected with the [PRESET] menu item are not suitable for the type of media, printing may be adversely affected. Choose settings optimized to the media you're using.

☞ P. 46, "Setup of Media"
☞ P. 98, "Fully Utilizing Preset Function"

Colors Are Unstable or Uneven

Did you shake the ink cartridges gently before in-stalling them?

Shake new cartridges gently before you install them.

Is the media wrinkled?

If the media is wrinkled and comes loose from the platen, colors may be uneven or printing quality may suffer.

☞ P. 152, "Media Feed Is Not Smooth"

Was printing paused partway through?

When printing is paused, the coloring at the seam may be altered when printing resumes. Avoid pausing printing. By default, printing pauses when ink remaining inside the machine runs out. Before you perform lengthy printing, check the amount of ink remaining in the ink cartridges. Printing may also pause when data is not sent from the computer quickly enough. We recommend not performing any other tasks with the computer while printing is in progress.

Is the printer installed in a level and stable location?

Never install the machine in a location where it is tilted or where it may wobble or experience vibration. Also make sure that the print heads are not exposed to moving air. These factors may lead to missing dots or reduced printing quality.

Are the operating parameters set to appropriate values?

Depending on the settings for such menu items as [FULL WIDTH S] and [PERIODIC CL.], uneven colors may occur. If the settings have been changed, try restoring them to their default values.

☞ P. 112, "Speeding Up Output for Narrow Media"
☞ P. 113, "Preventing Soiling of the Media and Dot Drop-Out"

Are the settings for the [PRESET] menu item appropriate?

If the settings selected with the [PRESET] menu item are not suitable for the type of media, printing may be adversely affected. Choose settings optimized to the media you're using.

P. 98, "Fully Utilizing Preset Function"

The Media Becomes Soiled When Printed

Do the print heads contact the media?

The height of the print heads may be too low. Also, if the media is not loaded and set up correctly, it may wrinkle or come loose and strike the heads.

☞ P. 109, "Adjusting Head Height to Match Media Thickness"
☞ P. 152, "Media Feed Is Not Smooth"

Are the print heads dirty?

The following may cause ink to drip on the media during printing.

- **Buildup of fibrous dust (lint) around the heads.**
- **Ink transferred to the heads due to rubbing against the media.**

If this happens, clean the print heads manually. We recommend carrying out periodic head cleaning.

☞ P. 77, "Maintenance that Should Be Performed More Than Once a Month"

- **Tow Low Humidity.**

Use this machine in the environment of 35 to 80 % RH (non condensation).

Are the pinch rollers or the media clamps dirty?

Periodically clean them.

☞ P. 72, "Cleaning"

Cutting Is Misaligned or Skewed

Is the media loaded and set up correctly?

If the media is not loaded and set up correctly, or media feed is not smooth, cutting may be adversely affected. Make sure the media is loaded and set up correctly.

☞ P. 152, "Media Feed Is Not Smooth"

Are the settings for the cutting conditions appropriate?

Misalignment or skewing may occur if the cutting speed is too fast or the blade force is too high. Try changing the cutting conditions. With media having a strong adhesive layer, the adhesive layer reattaches to itself immediately after cutting. However, if a cutting test shows that the peeling of the media and the blade traces on the backing paper are optimal, then the media is being cut properly. Be careful not to make the blade force too high.

☞ P. 115, "Fully Utilizing Cutting Function"

Is the length of output too long?

For printing followed immediately by cutting in particular, the longer the page length (that is, the longer the distance the media is returned after printing), the greater is the chance of misalignment occurring. It is a good idea to keep the size of each single page to the minimum necessary.

Are you using media that exhibits large expansion and contraction?

When you're performing printing followed immediately by cutting, misalignment occurs if the media expands or contracts. If this happens, try performing printing with crop marks, then setting the base point and one or more align points and performing cutting. This corrects for expansion and contraction of the media.

Is [AUTO ENV. MATCH] set to the "DISABLE" setting?

The printing and cutting positions may become misaligned due to ambient temperature or humidity. Setting [AUTO ENV. MATCH] to "ENABLE" performs matching to the environment to correct for misalignment.

☞ P. 123, "Viewing the Automatic Environment Correction Function Settings"

Are the settings for the [CALIBRATION] menu item (in the [CUTTING MENU] menu item) correct?

When you're performing printing followed immediately by cutting, go to [CUTTING MENU] and set the [CALIBRATION] value to "0.00."

☞ P. 119, "Performing Distance Correction During Cutting"

Are the pinch rollers placed on the proper locations?

Be sure to place the pinch Rollers on the grit rollers. If the pinch rollers are not placed on the proper locations, misalignment of the media may occur.

☞ P. 35, "Loading Media"

Media Jam Occurs!

The Media Jams

If an error message is displayed because the media has jammed, immediately correct the problem. Failure to do so may damage the print heads.

☞ P. 162, "[MOTOR ERROR TURN POWER OFF]"

Is the media warped or wrinkled?

Many factors can cause warping or wrinkling. Refer to the following and correct the problem.

☞ P. 152, "Media Feed Is Not Smooth"

Is the height of the print heads too low?

Try raising the heads higher. Media may inevitably warp or wrinkle slightly, so adjust the height of the heads to take this into account.

☞ P. 109, "Adjusting Head Height to Match Media Thickness"

Media Feed Is Not Smooth

A variety of problems can occur if the media feed is not smooth. This can cause such problems as poor printing quality, contact with the media by the print heads, misaligned positioning, or media jams. Take action as follows.

Media Wrinkles or Shrinks

Is the media loaded and set up straight and securely?

Feed is not smooth when the media is not straight or is tensioned unevenly on the left and right. Reload the media.

☞ P. 46, "Setup of Media"

Was loaded media allowed to stand for some time?

Media may shrink or wrinkle if it is heated for an extended time. When printing ends, switch off the sub power or remove the media.

Are the media clamps mounted?

When you're performing printing, be sure to attach the media clamps.

Was the media loaded while the print heater was hot?

Loading media after the print heater has warmed up causes the temperature of the media to rise suddenly, which may cause the media to shrink or wrinkle during printing. Before loading media, switch off the sub power and allow the platen to cool.

☞ P. 101, "Fully Utilize the Media Heating System"

Is the temperature of the media heating system too high?

Set the temperature to suitable values for the type of media.

☞ P. 101, "Fully Utilize the Media Heating System"

Is the temperature of room too low?

Use this machine in an environment having an ambient temperature of 20 to 32°C (68 to 90°F). If the machine is used at an ambient temperature less than 20°C, then depending on the type or width of the media, wrinkling or temperature-caused unevenness may occur. If this happens, try lowering the temperature of the media heating system by about 2°C. To obtain stable printing results, however, the machine should be used at an ambient temperature of 20 to 32°C(68 to 90°F).

Is the humidity of the room too high?

Use this machine in the environment of 35 to 80 %RH (non condensation).

Is the using media deflected?

If using the deflected media, it cause winkle of the media.

Media Feed Is Not Straight

Is the media loaded and set up straight and securely?

Feed is not smooth when the media is not straight or is tensioned unevenly on the left and right. Reload the media.

☞ P. 46, "Setup of Media"

Media Feed Is Not Smooth

Do the media or the shafts strike some other object?

Make sure the media and the shafts do not touch anything else. This may affect output, even when feed appears to be smooth.

☞ P. 46, "Setup of Media"

Is the media too thick?

Media that is too thick may not only cause unstable feed, but may scrape the print heads, resulting in malfunction. Never use such media.

Are the grit rollers dirty?

Check to make sure the grit rollers are free of buildup of foreign material such as media scraps.

☞ P. 72, "Cleaning"

Print Head Stops Moving. Why?

If the print-head carriage stops over the platen, take action immediately to prevent the heads from drying out.

What to Do First

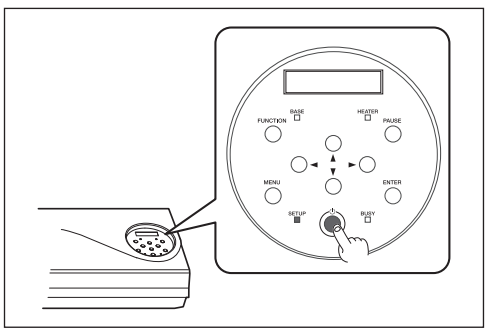

Switch the sub power off, then back on again.
If the media is jammed, then also remove the media.
If the print-head carriage move to the stand-by position (inside the side cover), it means the operation has ended successfully.

If the Heads Still Do Not Move

Try switching off the main power, then again switching on the main power, followed by the sub power.

If the Heads Still Do Not Move

If the heads still do not move, carry out the following emergency response measure, then contact your authorized Roland DG Corp. dealer or us.

Procedure

1. **Switch off the main power and open the front cover.**
2. **Remove the Cover R. Detach the side cover.**

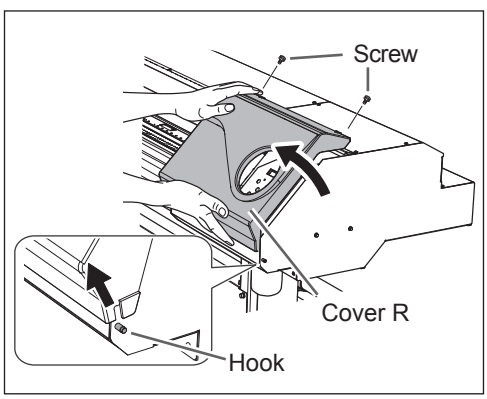

❸

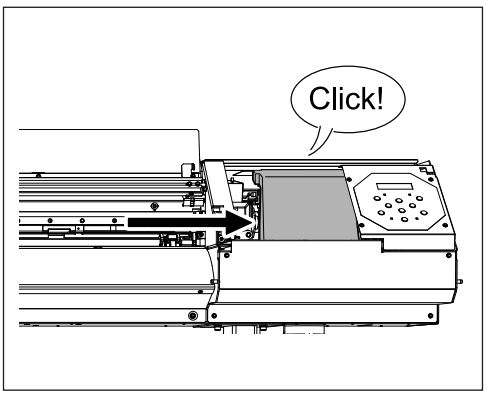

Gently move the print head to the standby position.

Stopping at the place where the audible click is heard locks the print heads in place.

❹ **Gently apply pressure from the right side to make sure the heads don't move to the left.**

If the print heads move to the left, again move them slowly by applying pressure from the left side and make sure they lock in place.

Other Problems

The Printer Unit Doesn't Run

Is the power switched on?

Switch on the printer's main power, then press the sub power switch and make sure the sub power switch lights up.

☞ P. 34, "Switch On!"

Is [SETUP] illuminated?

Output is not performed when [SETUP] is not illuminated. Lower the loading lever.

☞ P. 62, "Getting Ready to Receive Data from a Computer"

Is the front cover open?

Close Front Cover, Cover L and Cover R.

Is the top menu displayed?

Top menu

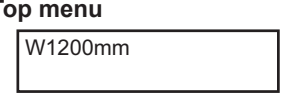

If the top menu isn't displayed, output doesn't start even when data is sent from the computer. To go to the top menu, press (MENU), then press (◄).

☞ P. 62, "Getting Ready to Receive Data from a Computer"

Is (PAUSE) illuminated?

When (PAUSE) lights up, operation is paused. To resume, press (PAUSE). (PAUSE) goes dark and outputting resumes.

☞ P. 64, "Pausing and Canceling Output"

Has ink run out?

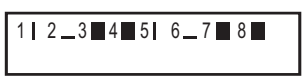

When the screen shown in the figure is displayed, the machine cannot receive the data of printing or cutting instructions. If the screen shown in the figure appears during a printing operation, the printer operation differs according to the setting of "EMPTY MODE".

- When "STOP" is selected: The printing operation temporarily stops.
- When "CONT." is selected: A warning beep sounds and the printing operation continues until the machine finishes outputting the received print data. You can temporarily stop the printing operation by pressing (PAUSE).

In either case, replacing the ink cartridge with a new one allows the machine to recover from the error.
If the machine holds the print data that have not been processed, the printing operation is resumed.
If there are unsent data in the computer, resending the data allows printing and cutting to be restarted.

☞ P. 69, "How to Replace Ink Cartridges"
☞ P. 138, "Determining What Happens When Ink Runs Out"

Is a message displayed on the screen?

☞ P. 158, "A Message Appears"
☞ P. 159, "An Error Message Appears"

Is the cable connected?

Connect the cable securely.

☞ "Setup Guide"

Is the network routing appropriate?

Try connecting the computer and the machine to the same hub, or connecting them directly using a crossover cable. If this makes it possible to perform output, it means the problem is in the network itself.

Are the network settings correct?

If the cable connections are secure and no problem is found in the network itself, make sure that the IP address and other such settings are appropriate. The settings on both the machine and the computer must be appropriate. Redo the settings, checking to ensure that the IP address doesn't conflict with the IP address for another device on the network, that the port setting for the software RIP specifies the IP address set on the machine, that the settings have no typing errors, and for other such problems.

☞ "Setup Guide"
☞ P. 143, "Viewing Information About the System of This Machine"

Did the software RIP end abnormally?

Make sure the software RIP is running correctly, then switch the sub power switch off and back on.

☞ "Roland VersaWorks Quick Start Guide"

The Media Heating System Doesn't Warm Up

Is media loaded?

The media heating system does not warm up to the preset temperature when [SETUP] is dark (by default). Load media and wait for the machine to warm up.

☞ P. 101, "Fully Utilize the Media Heating System"

Is the temperature of the room too low?

Use the machine in an environment where the temperature is 20 to 32°C (68 to 90°F).

Cannot Cut Off the Media

Is the separating knife mounted?

If the separating knife is not mounted, you cannot cut off the media.

☞ P. 94, "Replacing the Separating Knife"

Are the cut rail mounted?

If the cut rail is not mounted, you cannot cut off the media.

☞ P. 94, "Replacing the Separating Knife"

Discharged Fluid Level Cannot Be Checked.

Are there ink splashes inside the drain bottle?

If the inner surface of the drain bottle has ink splashes, you may not be able to check the amount of discharged fluid.

☞ P. 71, "When You Cannot Check Discharged Fluid Level in Drain Bottle"

A Message Appears

These are the main messages that appear on the machine's display to prompt correct operation. They do not indicate any error. Follow the prompts and take action accordingly.

[1 ■ 2 ■ 3 ■ 4 ■ 5 ■ 6 ■ 7 ■ 8 ■]

Only a small amount of ink remains. Replace the cartridge indicated by the flashing number with a new cartridge. (The display varies according to the number of ink cartridge slots in use.)

[PRESS THE POWER KEY TO CLEAN]

This appears when the machine has been unused for about one month. Switch on the sub power once a month.

☞ P. 96, "When Not in Use for a Prolonged Period"

[CLOSE THE COVER (FRONT COVER, COVER L or COVER R]

Close the Front cover, Cover L, or Cover R. For safety, the carriage does not operate while a cover is open.

[SHEET NOT LOADED SETUP SHEET]

Load media. This message appears when an attempt to perform a printing test was made while no media was loaded.

[EMPTY DRAIN BOTTLE]

This appears when a certain amount of discharged fluid collects in the drain bottle. If this screen appears, discard the discharged fluid in the bottle.

☞ P. 70, "Disposing of Discharged Ink"

[INSTALL DRAIN BOTTLE]

Check whether the drain bottle is installed. Install the drain bottle, then press ENTER.

☞ P. 70, "Disposing of Discharged Ink"

[NOW HEATING...]

Wait until the media heating system reaches the preset temperature. Printing starts when HEATER lights up. You can stop printing by holding down PAUSE for one second or longer while this is displayed. Pressing PAUSE makes printing start immediately, without waiting to reach the preset temperature.

[TIME FOR MAINTENANCE]

It is time to clean the printer heads manually. After verifying, press ENTER.

☞ P. 78, "Manual Cleaning"

[TIME FOR WIPER REPLACE]

It is time to replace the wiper or felt wiper. After verifying, press ENTER.

☞ P. 86, "Replacing the Wiper"
☞ P. 89, "Replacing the Felt Wiper"

An Error Message Appears

This describes the error messages that may appear on the machine's display, and how to take action to remedy the problem. If the action described here does not correct the problem, or if an error message not described here appears, contact your authorized Roland DG Corp. dealer or us.

[ALIGN POINT POSITION INVALID]

An attempt was made to set an align point at a location where the setting cannot be made.
No align point can be set when the angle of the base point and the align point is too large. Reload the media correctly, so that the angle is minimized, then set the base point and the align point again to match the crop marks.

☞ P. 126, "Performing Printing and Cutting Separately"

[HEATING TIMEOUT CONTINUE?]

The print heater or dryer did not reach the preset temperature.
This occurs because the temperature of the location where the machine is installed is too low. We recommend raising the temperature. To continue waiting for the temperature to rise, press ENTER. To start printing immediately, press PAUSE.

[CROPMARK ERROR NOT FOUND]

Automatic detection of crop marks could not be accomplished.
Load the media at the correct position and perform detection of crop marks again. Depending on the media, it may not be possible to detect crop marks automatically. If repeating automatic crop-mark detection results in an error again, then perform manual crop-mark detection.

☞ P. 126, "Performing Printing and Cutting Separately"

[CAN'T PRINT CROP CONTINUE?]

The size of the data including the crop marks is larger than the printing or cutting area of the loaded media.
To continue performing output without correcting this, press ENTER. At this time, the portion extending beyond the printing or cutting area and the crop marks are not printed. To stop output, stop sending data from the computer, then raise the loading lever. Make the printing or cutting area wider, such as by replacing the media with a larger piece of media or by changing the positions of the pinch rollers, then send the data again.

The size of the data being output is too small.
Make the scanning-direction size of the data at least 65 mm (2.6 in). To continue performing output without correcting this, press ENTER. At this time, the data is output without printing the crop marks. To stop output, stop sending data from the computer, then raise the loading lever. Change the size of the data, then send the data again.

[TEMPERATURE IS TOO HIGH **°C]

The temperature of the location where the machine is installed has risen above the ambient temperature at which the machine can operate.
Operation cannot be continued. Switch off the sub power. The displayed temperature is the current ambient temperature of the installation location. Bring the installed location to a temperature at which operation is possible (15 to 32°C (59 to 90°F)) and allow the machine to come to room temperature, then turn on the power.

[SERVICE CALL ****]

An unrecoverable error occurred, or part replacement that must be performed by a service technician is required.

Note the number displayed, then switch off the sub power. After you switch off the power, inform your authorized Roland DG Corp. dealer or us of the number that appeared on the display.

[SHEET TOO SMALL CONTINUE?]

The size of the data is larger than the printing or cutting area of the loaded media.

To continue performing output without correcting this, press ENTER. At this time, the portion extending beyond the printing or cutting area is not output. To stop output, stop sending data from the computer, then raise the loading lever. Make the printing or cutting area wider, such as by replacing the media with a larger piece of media or by changing the positions of the pinch rollers, then send the data again.

[SHEET SET ERROR SET AGAIN]

The loading lever was lowered while no media was loaded.

Raise the loading lever, place media at the correct location, then lower the lever again.

☞ P. 35, "Loading Media"

[EDGE DETECTION] is set to "ENABLE," but transparent media was loaded.

Raise the loading lever, set the [EDGE DETECTION] menu item to "DISABLE," then reload the media.

☞ P. 112, "Speeding Up Output for Narrow Media"

The loaded media is too small.

Press any key to clear the error. Replace with media of usable size.

[TEMPERATURE IS TOO LOW **°C]

The temperature of the location where the machine is installed has fallen below the ambient temperature at which the machine can operate.

Operation cannot be continued. Switch off the sub power. The displayed temperature is the current ambient temperature of the installation location. Bring the installed location to a temperature at which operation is possible (15 to 32°C (59 to 90°F)) and allow the machine to come to room temperature, then turn on the power.

[DATA ERROR CANCELING...]

Output was stopped because a problem was found in the data received.

Operation cannot be continued. Check for a problem with the connector cable or the computer, and redo the operation from the step of loading the media.

[PINCHROLL ERROR INVALID LEFT (RIGHT) POS]

The left (right) pinch roller is positioned at a location where it does not pinch the media.

Raise the loading lever and move the left pinch roller to the correct location.

☞ P. 35, "Loading Media"

[PINCHROLL ERROR *** FROM RIGHT]

The middle pinch rollers are positioned at locations where they do not pinch the media.
Raise the loading lever and move the middle pinch rollers to the correct location.

☞ P. 35, "Loading Media"

Too many middle pinch rollers are installed.
Raise the loading lever, then remove all middle pinch rollers that are not positioned above grit rollers. The number of middle pinch rollers used varies according to the width of the loaded media.

☞ P. 35, "Loading Media"

[WRONG CARTRIDGE]

A cartridge that cannot be used was installed.
Remove the cartridge to clear the error. Use a cartridge of the specified type.

[CLEANING ERROR]

The printer made an emergency stop because an ink cartridge was removed while light choke cleaning or ink filling for the first time in the printer was in progress.
The ongoing task cannot be continued. Switch the sub power off by holding down the switch for one second or longer, and then back on. Then perform light choke cleaning or ink filling from the beginning. Note, however, be sure to perform light choke cleaning after the [INK RENEWAL] menu is perform and [INK RENEWAL] menu is finished.

☞ P. 83, "When Problems Such As Dot Drop-Out Are Not Cleared Up"

[CANCELED FOR PUMP PROTECTION]

The printer made an emergency stop because the following state has continued for 10 minutes or longer while light choke cleaning or ink filling for the first time in the printer was in progress.

- Printer is left with an ink cartridge removed
- Printer runs out of ink

The ongoing task cannot be continued. Switch off the sub power. After switching off the power, contact your authorized Roland DG Corp. dealer.

[AVOIDING DRY-UP TURN POWER OFF]

The print heads were forced to standby position to prevent them from drying out.
Operation cannot be continued. Switch the sub power off, then back on.

[SET HEAD HEIGHT TO . . .]

The height of the print heads is lower than the height specified on the RIP software.
This warning indicates that the height of the print heads are too low for the media thickness specified on the computer. The heads move to a location where you can operate the height-adjustment lever. Adjust to the displayed height, then press (ENTER).

☞ P. 109, "Adjusting Head Height to Match Media Thickness"

[MOTOR ERROR TURN POWER OFF]

A motor error occurred.

Operation cannot be continued. Switch off the sub power. Next, eliminate the cause of the error, then immediately switch on the sub power. If the machine is allowed to stand with the error uncorrected, the print head may dry out and become damaged.

This error may be caused by such factors as a mistake in loading the media, a media jam, or an operation that pulls the media with excessive force.

The media has jammed.

Carefully remove the jammed media. The print heads may also be damaged. Perform head cleaning, then perform a printing test and check the results.

The media was pulled with excessive force.

Excessive tension was applied to the media, and additional action is necessary to recover from this state. First, move the loading lever to the rear and adjust the media to create a small amount of slack, then switch on the sub power.

Chapter 7
Main Specifications

Printing/Cutting Area 164
Maximum Area 164
Maximum Area When Using Crop Marks 164
The Media-Cutoff Location During Continuous Printing 165
About the Blade 166
Locations of the Power Rating and Serial Number Labels 167
Specifications 168

Printing/Cutting Area

Maximum Area

The printing or cutting area along the horizontal plane (the direction in which the carriages move) is determined by the position of the pinch rollers.

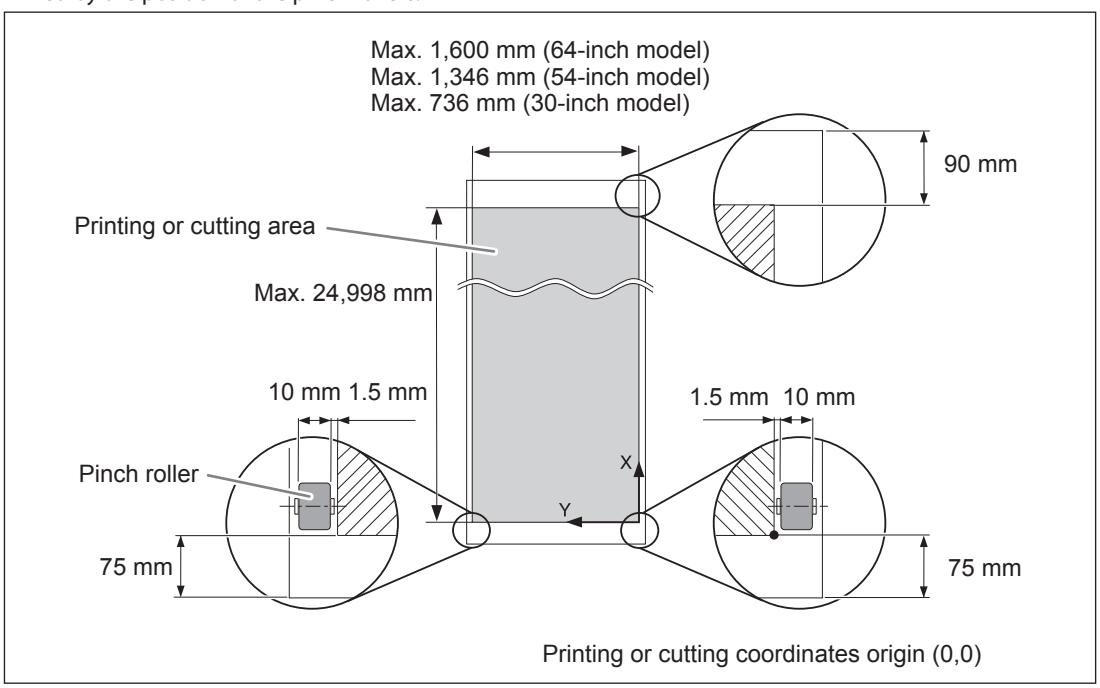

Maximum Area When Using Crop Marks

When crop marks are used, the printing or cutting area is reduced from the maximum area by an amount equal to the crop marks.

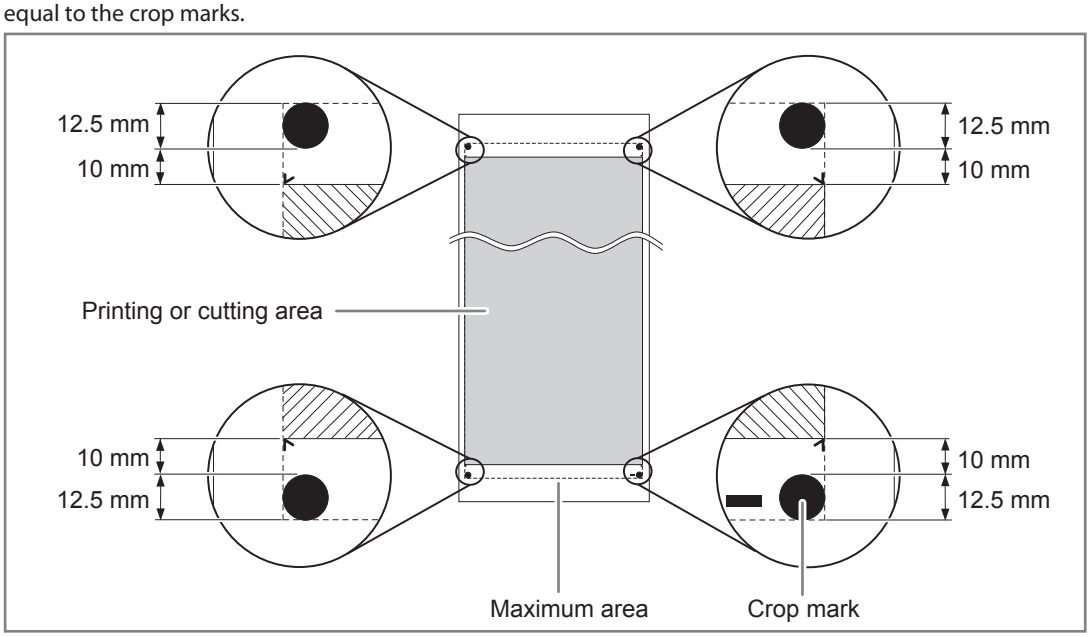

The Media-Cutoff Location During Continuous Printing

When a media-cutoff command is sent from the computer, the cutoff location on the media is as shown in the figure below.

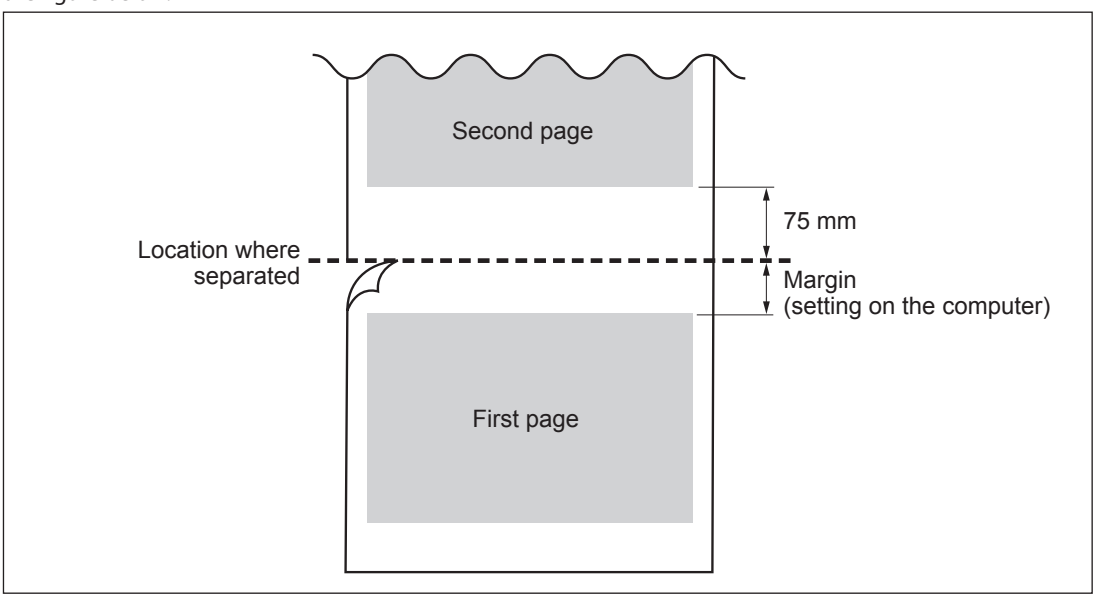

About the Blade

The cutting conditions and the service life of the blade change according to the media and the operating environment, even when you're using identical blades. The service life also differs according to the type of blade. A rough guide is shown below.

Blade	Media	Blade force	Amount of blade offset	Blade life* (general guide)
ZEU-U1005	General signage vinyl	50 to 150 gf	0.25 mm	8000 m
ZEC-U5025	General signage vinyl	30 to 100 gf	0.25 mm	4000 m
	Fluorescent vinyl	120 to 200 gf	0.25 mm	4000 m
	Reflective vinyl	100 to 200 gf	0.25 mm	4000 m

When uncut areas remain even when the blade force is increased to a value that is higher by 50 to 60 gf than the values shown in this chart, then replace the blade.

* The values for "Blade life" are estimates for when an identical type of media is used.

Locations of the Power Rating and Serial Number Labels

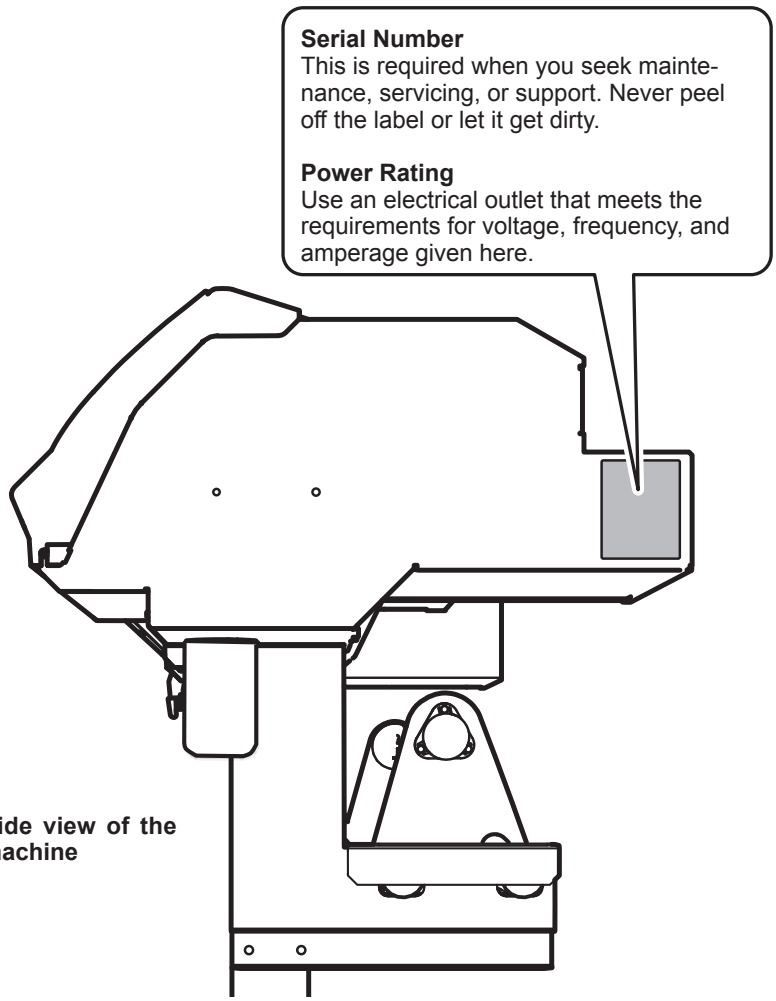

Side view of the machine

Specifications

		VS-640i	VS-540i	VS-300i
Printing technology		Piezoelectric inkjet		
Media	**Width**	210 to 1,625 mm (8.3 to 64 in.)	210 to 1,371 mm (8.3 to 54 in.)	182 to 762 mm (7.2 to 30 in.)
	Thickness	Maximum 1.0 mm (39 mil) with liner, for printing Maximum 0.4 mm (16 mil) with liner and 0.22 mm (9 mil) without liner, for cutting		
	Roll outer diameter	Maximum 210 mm (8.3 in.)		
	Roll weight	Max. 40 kg (88 lbs)	Max. 30 kg (66 lbs)	Max. 25 kg (55 lbs)
	Core diameter(*1)	76.2 mm (3 in.) or 50.8 mm (2 in.)		
Printing/cutting width(*2)		Max. 1,600 mm (63 in.)	Max. 1,346 mm (53 in.)	Max. 736 mm (29 in.)
Ink cartridges	**Types**	440-cc cartridge (cyan, magenta, yellow, black, light cyan, light magenta, and light black) 220-cc cartridge (metallic silver and white)		
	Colors	Four colors (cyan, magenta, yellow, and black) or, Seven colors (cyan, magenta, yellow, black, light cyan, light magenta, and light black) or, Eight colors (cyan, magenta, yellow, black, light cyan, light magenta, light black, and white) or, Eight colors (cyan, magenta, yellow, black, light cyan, light magenta, light black, and metallic silver) or, Eight colors (cyan, magenta, yellow, black, light cyan, light magenta, metallic silver, and white)		
Printing resolution (dots per inch)		Maximum 1,440 dpi		
Cutting speed		10 to 300 mm/s		
Blade force		30 to 300 gf		
Cutting blade	**Type**	Roland CAMM-1 series compatible		
	Blade offset	0.000 to 1.500 mm (0.000 to 0.059 in)		
Software resolution (when cutting)		0.025 mm/step		
Distance accuracy (when printing) (*3)(*4)		Error of less than ±0.3% of distance traveled, or ±0.3 mm, whichever is greater		
Distance accuracy (when cutting)(*3)		Error of less than ±0.4% of distance traveled, or ±0.3 mm, whichever is greater When distance correction has been performed (when the setting for [CUTTING MENU] - [CALIBRATION] has been made): Error of less than ±0.2% of distance traveled, or ±0.1 mm, whichever is greater		
Repeatability (when cutting) (*3)(*5)		±0.1 mm or less		
Alignment accuracy for printing and cutting (*3)(*6)		±0.5 mm or less		
Alignment accuracy for printing and cutting when reloading media (*3)(*7)		Error of less than ±0.5% of distance traveled, or ±3 mm, whichever is greater		
Media heating system (*8)		Print heater, setting range for the preset temperature: 30 to 45°C (86 to 112°F) Dryer, setting range for the preset temperature: 30 to 50°C (86 to 122°F)		
Connectivity		Ethernet (10BASE-T/100BASE-TX, automatic switching)		
Power-saving function		Automatic sleep feature		
Power requirements		AC 100 to 120 V ±10%, 7.8A, 50/60 Hz or AC 220 to 240 V ±10%, 4.0 A, 50/60 Hz	AC 100 to 120 V ±10%, 7.5 A, 50/60 Hz or AC 220 to 240 V ±10%, 3.8 A, 50/60 Hz	AC 100 to 120 V ±10%, 5.1 A, 50/60 Hz or AC 220 to 240 V ±10%, 2.6 A, 50/60 Hz
Power	**During operation**	Approx. 1,044 W	Approx. 995 W	Approx. 670 W
	Sleep mode	Approx. 14.5 W	Approx. 15.1 W	Approx. 14.4 W
Acoustic noise level	**During operation**	69 dB (A) or less		
	During standby	43 dB (A) or less		
Dimensions (with stand)		2,575 mm (W) x 795 mm (D) x 1,270 mm (H) (101.4 (W) x 31.1 (D) x 50 (H) in.)	2,315 mm (W) x 795 mm (D) x 1,270 mm (H) (91.1 (W) x 31.1 (D) x 50 (H) in.)	1,700 mm (W) x 795 mm (D) x 1,270 mm (H) (66.9 (W)x 31.1 (D) x 50 (H) in.)
Weight (with stand)		140 kg (309 lbs)	130 kg (287 lbs)	100 kg (220 lbs)
Environmental	**Power on (*9)**	Temperature: 15 to 32°C (59 to 90°F) (20°C [68°F] or more recommended) Humidity: 35 to 80%RH (non-condensing)		
	Power off	Temperature: 5 to 40°C (41 to 104°F), humidity: 20 to 80%RH (non-condensing)		
Accessories		Exclusive stands, power cord, blade, blade holder, media clamps, media holder, replacement blade for separating knife, User's Manual, etc.		

*1
Note: The media holder of this machine is exclusive use for the media of paper tube (core) inner diameter 3 inches. To use 2 inches media, the optional media flanges are required.

*2
The length of printing or cutting is subject to the limitations of the program.

*3
- Media type: Media specified by Roland DG Corp.
- Temperature: 25°C (77°F), humidity: 50%
- Roll media must be loaded correctly.
- Applicable when all pinch rollers available to the media width are used.
- Side margins: 25 mm or more for both the left and right margins
- Front margin: 35 mm or more
- Excluding expansion/contraction of the media
- Not assured when the print heater or dryer is used.
- All correction or adjustment function of this machine has been made properly.

*4
- With Roland PET film, print travel: 1 m

*5
- [PREFEED] menu item must be set to "ENABLE."

Range for assured repetition accuracy
64-inch model:
- For media with a width exceeding 610 mm: Length 4,000 mm
- For media with a width of 610 mm or less: Length 8,000 mm

54-inch model
- For media with a width exceeding 610 mm: Length 4,000 mm
- For media with a width of 610 mm or less: Length 8,000 mm

30-inch model
- Length 3,000 mm

*6
- Provided that media length is under 3,000 mm
- Excludes the effects of slanted movement and of expansion and contraction of the media.

*7
- Data size:

64-inch model:1,000 mm in the media-feed direction, 1,600 mm in the carriage-movement direction
54-inch model:1,000 mm in the media-feed direction, 1,346 mm in the carriage-movement direction
30-inch model:1,000 mm in the media-feed direction, 736 mm in the carriage-movement direction
- No lamination
- Automatic detection of crop marks at 4 points when media is reloaded.
- During cutting, [PREFEED] menu item must be set to "ENABLE."
- Excluding possible shift caused by expansion/contraction of the media and/or by reloading the media.

*8
- Warm-up is required after power up. This may require 5 to 20 minutes, depending on the operating environment.
- Depending on the ambient temperature and media width, the preset temperature may fail to be reached.

*9
- Operating environment

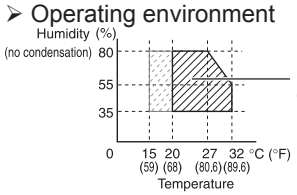

Use in an operating environment with this range.

For China

产品中有毒有害物质或元素的名称及含量

部件名称	有毒有害物质或元素					
	铅(Pb)	汞(Hg)	镉(Cd)	六价铬(Cr(VI))	多溴联苯(PBB)	多溴二苯醚(PBDE)
印刷电路板	×	○	×	○	○	○
头部	×	○	○	○	○	○
壳体、底架	×	○	○	○	○	○
电源	×	○	×	○	○	○
其他（电缆、附件等）	×	○	○	○	○	○

○：表示该有毒有害物质在该部件所有均质材料中的含量均在 GB/T26572-2011 标准规定的限量要求以下。
×：表示该有毒有害物质至少在该部件的某一均质材料中的含量超出 GB/T26572-2011 标准规定的限量要求。

环保使用期限

此标志适用于在中国国内销售的电子信息产品，表示环保使用期限的年数。所谓环保使用期限是指在自制造日起的规定期限内，产品中所含的有害物质不致引起环境污染，不会对人身、财产造成严重的不良影响。
环保使用期限仅在遵照产品使用说明书，正确使用产品的条件下才有效。
不当的使用，将会导致有害物质泄漏的危险。

For EU Countries

This product must be disposed of separately at your local waste recycling center. Do not dispose of in household waste bin.

Bitte führen Sie dieses Produkt separat Ihrer örtlichen Entsorgungsstelle zu. Bitte nicht mit dem normalen Hausmüll entsorgen.

Ne jetez pas le produit avec vos ordures ménagères. Portez-le dans un centre recyclage des déchets.

Questo prodotto deve essere smaltito negli appositi contenitori per la raccolta differenziata, non buttare nel cestino dei rifiuti casalinghi.

Este producto debe devolverse al centro de reciclaje más cercano a su domicilio para su correcta eliminación. No lo tire a la basura.

Deite fora separadamente este produto no seu centro de reciclagem local. Não o deite fora no seu caixote do lixo.

Lever dit product in bij een lokaal afvalverzamelpunt. NIET met normaal huishoudelijk afval afvoeren.

Dette Produkt skal smides særskilt væk på den lokale affalds- og genbrugsstation. Må ikke smides ud sammen med almindeligt husholdningsaffald.

Tätä tuotetta ei saa hävittää normaalien talousjätteiden mukana, vaan se on toimitettava ongelmajätteiden keräilypisteeseen hävitettäväksi.

Produkten måste kasseras separat på din lokala återvinningscentral. Släng inte produkten tillsammans med hushållssoporna.

Μην πετάξετε το αντικείμενο αυτό στο καλάθι των απορριμμάτων. Αφαιρέστε τις μπαταρίες και προσκομίστε το στο τοπικό κέντρο ανακύκλωσης.

This product is using GNU General Public License (GPL) / GNU Lesser General Public License (LGPL) software. You have the right to acquire, modify, and distribute the source code for this GPL/LGPL software. You can obtain the GPL/LGPL source code used in this product by downloading it from the following website.
URL: http://www.rolanddg.com/gpl/

Roland DG Corp. has licensed the MMP technology from the TPL Group.

R2-130726